MANART

23876 MONTICELLO - Fraz. Cortenuova (LC) ITALY
Via T. Moneta, 17 - Tel. 039.920.35.55 - 039.920.26.44
Fax 039.920.28.01 - e-mail: manart@manart.it
www.manart.it

accessori per mobili

made in italy

MANART

www.manart.it

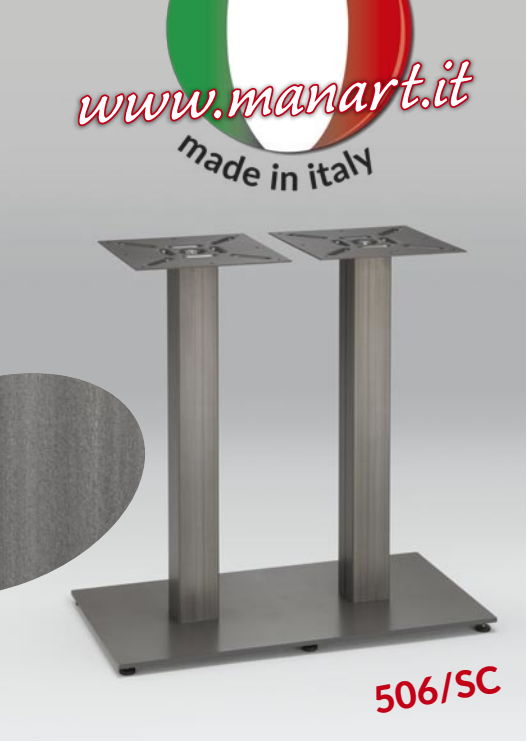
www.manart.it
made in italy
506/SC

286
Ø42mm

285
Ø42mm

292

256
Ø60mm

255
Ø70mm

257

294

293

287
60x60mm

278R
50x50mm

258
60x60mm

289

290

298

295

288

291

Timbro del rivenditore - Dealer's stamp - Händlerstempel - Timbre du revendeur

MONTICELLO

MANART s.r.l.

MANART srl - 23876 MONTICELLO - FRAZ. CORTENUOVA (LC) ITALY - Via T. Moneta, 17 - Tel. 039.920.35.55 - 039.920.26.44 - Fax 039.920.28.01
www.manart.it e-mail: manart@manart.it

1 piedini, molle, regolabili, tappi

2 gambe, fusti e giunzioni per tavoli, passacavi

3 cestelli, sottopensili, supporti, ganci, colonne componibili per cucina

4 reggipensili, tubi, reggitubi e reggimensole, minuteria varia, giunzioni e chiusure

5 cremagliera, tubi tondi e quadri con accessori per scaffalature

6 portabiti, portacravatte, portascarpe per armadi, fermalibri e ruote

7 sedie, poltrone, sgabelli, scalette e appendiabiti

MANART

23876 MONTICELLO - Fraz. Cortenuova (LC) ITALY
Via T. Moneta, 17 - Tel. 039.920.35.55 - 039.920.26.44
Fax 039.920.28.01 - e-mail: manart@manart.it
www.manart.it

1 piedini molle regolabili tappi

ART. 113

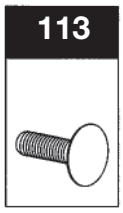

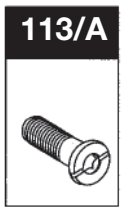

ALTEZZA - HEIGHT - HAUTÊR - HÖHE

100 ÷ 120 ÷ 150 ÷ 200 mm

FISSAGGIO - FIXING - FIXAGE - FIXIERUNG

Viti 10MA standard o forata, o viti per legno - Piastra smontabile 60x60 mm
10MA standard or socket head screws or wood screws - Demountable plates 60x60 mm.
Vis 10MA standard ou à tête forée ou vis à bois - Plaque démountable 60x60 mm.
10MA Schrauben, Standard oder mit Bohrung, oder Holzschrauben - Abnehmbare Platte 60x60 mm.

MATERIALE - MATERIAL - MATIÈRE - MATERIAL

Piastra smontabile e tubo in acciaio zincato Ø 28 mm. - Regolazione in ABS.
Demountable plate and zinc-coated steel Ø 28 mm. - Regulation in ABS.
Plaque démontable et acier zingué Ø 28 mm - Regulation en ABS.
Abnehmbare Platte und verzinktstahl Ø 28 mm - Einstellung aus ABS.

COPRITESTA - COVER UP - CACHE - DECKSCHRAUBE AUS KUNSI-STOFF

Bianco - beige - marrone - nero.
Blanc - beige - marron - noir.
White - beige - brown - black.
Weiss - Beige - Braun - Schwarz.

REGOLAZIONE - ADJUSTMENT - REGLAGE - REGULIERUNG

113 Esterna. Outside.
Extérieur. Aeusser.

113/A Interna, esterna. Inside, outside.
Intérieur, extérieur. Inner, Aeusser.

ART. 119

ALTEZZA - HEIGHT - HAUTÊR - HÖHE

100 ÷ 120 ÷ 150 ÷ 200 mm

FISSAGGIO - FIXING - FIXAGE - FIXIERUNG

Piastra smontabile 60x60 mm. viti per legno
Demountable plates 60x60 mm. wood screws
Plaque démountable 60x60 mm. vis à bois
Abnehmbare Platte 60x60 mm. Holzschrauben

MATERIALE - MATERIAL - MATIÈRE - MATERIAL

Piastra smontabile e tubo in acciaio zincato Ø 28 mm. - Regolazione in ABS.
Demountable plate and zinc-coated steel Ø 28 mm. - Regulation in ABS.
Plaque démontable et acier zingué Ø 28 mm - Regulation en ABS.
Abnehmbare Platte und verzinktstahl Ø 28 mm - Einstellung aus ABS.

REGOLAZIONE - ADJUSTMENT - REGLAGE - REGULIERUNG

Esterna. Outside.
Extérieur. Aeusser.

ART. 113 - R. Ø 50

ART. 119 - R. Ø 50

REGOLABILE Ø 50 MM.
Piede regolabile Ø 50 mm, disponibile su richiesta.
Ø 50 mm adjustable foot, upon request.
Pied reglable Ø 50 mm., disponible sur demande.
Regulierbarer Fuß, Ø 50 mm.

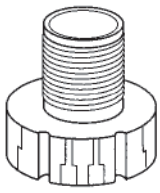

ART. 116

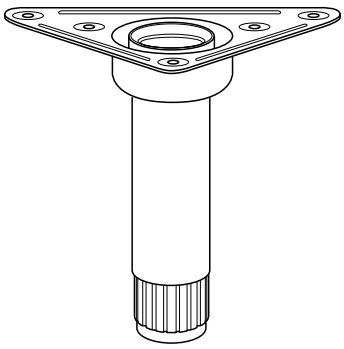

ALTEZZA - HEIGHT - HAUTÊR - HÖHE

100 ÷ 120 ÷ 150 ÷ 220 mm

FISSAGGIO - FIXING - FIXAGE - FIXIERUNG

Piastra triangolare a incastro.
Triangular pointed plate.
Plaque triangulaire encaissée.
Einschnitte dreieckige Platte

MATERIALE - MATERIAL - MATIÉRE - MATERIAL

Acciaio zincato Ø 28 mm. Regolazione in ABS.
Zinc-coated steel Ø 28 mm. Regulation in ABS.
Acier zingué Ø 28 mm. Regulation en ABS.
Verzinkstahl Ø 28 mm. Einstellung aus ABS.

REGOLAZIONE - ADJUSTMENT - REGLAGE - REGULIERUNG

Esterna. Outside.
Extérieur. Aeusser.

ART. 117 - 117/A

PIASTRA Ø 50 mm

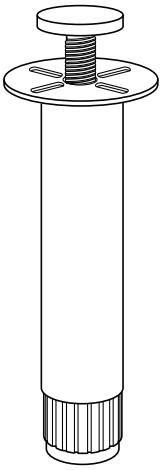

117

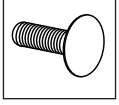

117/A

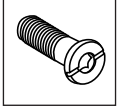

ALTEZZA - HEIGHT - HAUTÊR - HÖHE

55 ÷ 60 ÷ 80 ÷ 100 ÷ 120 ÷ 150 ÷ 200 mm

FISSAGGIO - FIXING - FIXAGE - FIXIERUNG

Viti 10MA standard o forata.
10MA standard or socket head screws.
Vis 10MA standard ou à tête forée.
10MA Schrauben, Standard oder mit Bohrung.

MATERIALE - MATERIAL - MATIÉRE - MATERIAL

Acciaio zincato Ø 28 mm. Regolazione in ABS.
Zinc-coated steel Ø 28 mm. Regulation in ABS.
Acier zingué Ø 28 mm. Regulation en ABS.
Verzinktstahl Ø 28 mm. Einstellung aus ABS.

COPRITESTA - COVER UP - CACHE - DECKSCHRAUBE AUS KUNSISTOFF

Bianco - beige - marrone - nero. White - beige - brown - black.
Blanc - beige - marron - noir. Wiess - Beige - Braun - Schwarz.

REGOLAZIONE - ADJUSTMENT - REGLAGE - REGULIERUNG

117 Esterna. Outside. **117/A** Interna, esterna. Inside, outside.
Extérieur. Aeusser. Intérieur, extérieur. Inner, Aeusser.

ART. 117 - 117/A

PIASTRA Ø 60 mm

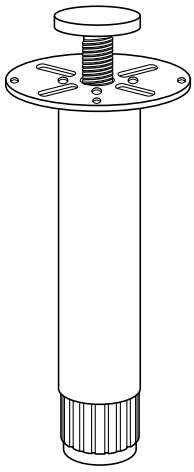

117

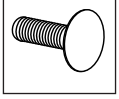

117/A

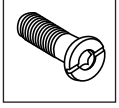

ALTEZZA - HEIGHT - HAUTÊR - HÖHE

55 ÷ 60 ÷ 80 ÷ 100 ÷ 120 ÷ 150 ÷ 200 mm

FISSAGGIO - FIXING - FIXAGE - FIXIERUNG

Viti 10MA standard o forata, o viti per legno.
10MA standard or socket head screws or wood screws.
Vis 10MA standard ou à tête forée ou vis à bois.
10MA Schrauben, Standard oder mit Bohrung, oder Holzschrauben

MATERIALE - MATERIAL - MATIÉRE - MATERIAL

Acciaio zincato Ø 28 mm. Regolazione in ABS.
Zinc-coated steel Ø 28 mm. Regulation in ABS.
Acier zingué Ø 28 mm. Regulation en ABS.
Verzinktstahl Ø 28 mm. Einstellung aus ABS.

COPRITESTA - COVER UP - CACHE - DECKSCHRAUBE AUS KUNSISTOFF

Bianco - beige - marrone - nero. White - beige - brown - black.
Blanc - beige - marron - noir. Wiess - Beige - Braun - Schwarz.

REGOLAZIONE - ADJUSTMENT - REGLAGE - REGULIERUNG

117 Esterna. Outside. **117/A** Interna, esterna. Inside, outside.
Extérieur. Aeusser. Intérieur, extérieur. Inner, Aeusser.

ART. 118 - 118/A

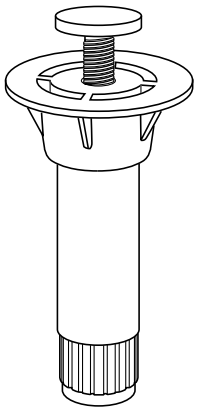

118

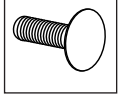

118/A

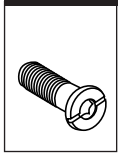

ALTEZZA - HEIGHT - HAUTÊR - HÖHE

100 ÷ 120 ÷ 150 ÷ 200 mm

FISSAGGIO - FIXING - FIXAGE - FIXIERUNG

Viti 10MA standard o forata.
10MA standard or socket head screws.
Vis 10MA standard ou à tête forée.
10MA Schrauben, Standard oder mit Bohrung

MATERIALE - MATERIAL - MATIÉRE - MATERIAL

Acciaio zincato Ø 28 mm. Piastra smontabile in ABS e regolazione in ABS.
Zinc-coated steel Ø 28 mm. Demountable plate and regulation in ABS.
Acier zingué Ø 28 mm. Plaque démontable et regulation en ABS.
Verzinktstahl Ø 28 mm. Abnehmbare Platte und Einstellung aus ABS.

COPRITESTA - COVER UP - CACHE - DECKSCHRAUBE AUS KUNSISTOFF

Bianco - beige - marrone - nero. White - beige - brown - black.
Blanc - beige - marron - noir. Wiess - Beige - Braun - Schwarz.

REGOLAZIONE - ADJUSTMENT - REGLAGE - REGULIERUNG

118 Esterna. Outside. Extérieur. Aeusser.
118/A Interna, esterna. Inside, outside. Intérieur, extérieur. Inner, Aeusser.

ART. 130 - 130/A

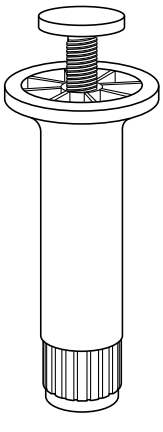

130

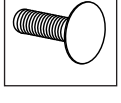

130/A

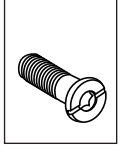

ALTEZZA - HEIGHT - HAUTÊR - HÖHE

100 ÷ 110 ÷ 120 ÷ 130 ÷ 140 ÷ 150 ÷ 160 ÷ 170 mm

FISSAGGIO - FIXING - FIXAGE - FIXIERUNG

Viti 10MA standard o forata.
10MA standard or socket head screws.
Vis 10MA standard ou à tête forée.
10MA Schrauben, Standard oder mit Bohrung.

MATERIALE - MATERIAL - MATIÉRE - MATERIAL

ABS Bianco o nero Ø 28 mm.
Black or white ABS Ø 28 mm.
ABS blanc or noir Ø 28 mm.
ABS Weiss oder Schwarz Ø 28 mm.

COPRITESTA - COVER UP - CACHE - DECKSCHRAUBE AUS KUNSISTOFF

Bianco - beige - marrone - nero. White - beige - brown - black.
Blanc - beige - marron - noir. Wiess - Beige - Braun - Schwarz.

REGOLAZIONE - ADJUSTMENT - REGLAGE - REGULIERUNG

130 Esterna. Outside. Extérieur. Aeusser.
130/A Interna, esterna. Inside, outside. Intérieur, extérieur. Inner, Aeusser.

ART. 131 - 131/A

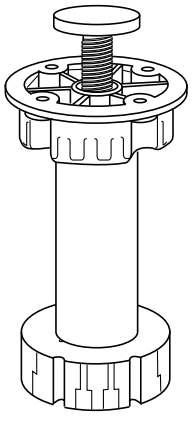

131

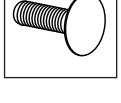

131/A

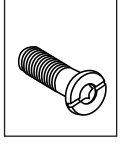

ALTEZZA - HEIGHT - HAUTÊR - HÖHE

100 ÷ 110 ÷ 120 ÷ 130 ÷ 140 ÷ 150 mm

FISSAGGIO - FIXING - FIXAGE - FIXIERUNG

Viti 10MA standard o forata, o viti per legno.
10MA standard or socket head screws or wood screws.
Vis 10MA standard ou à tête forée ou vis à bois.
10MA Schrauben, Standard oder mit Bohrung, oder Holzschrauben.

MATERIALE - MATERIAL - MATIÉRE - MATERIAL

ABS Bianco o nero Ø 28 mm.
Black or white ABS Ø 28 mm.
ABS blanc or noir Ø 28 mm.
ABS Weiss oder Schwarz Ø 28 mm.

COPRITESTA - COVER UP - CACHE - DECKSCHRAUBE AUS KUNSISTOFF

Bianco - beige - marrone - nero. White - beige - brown - black.
Blanc - beige - marron - noir. Wiess - Beige - Braun - Schwarz.

REGOLAZIONE - ADJUSTMENT - REGLAGE - REGULIERUNG

131 Esterna. Outside. Extérieur. Aeusser.
131/A Interna, esterna. Inside, outside. Intérieur, extérieur. Inner, Aeusser.

ART. 132 - 132/A

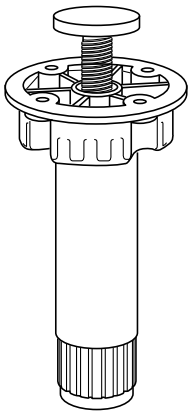

132

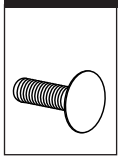

132/A

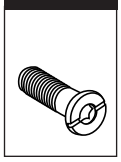

ALTEZZA - HEIGHT - HAUTÊR - HÖHE

100 ÷ 110 ÷ 120 ÷ 130 ÷ 140 ÷ 150 mm

FISSAGGIO - FIXING - FIXAGE - FIXIERUNG

Viti 10MA standard o forata, o viti per legno.
10MA standard or socket head screws or wood screws.
Vis 10MA standard ou à tête forée ou vis à bois.
10MA Schrauben, Standard oder mit Bohrung, oder Holzschrauben.

MATERIALE - MATERIAL - MATIÉRE - MATERIAL

ABS bianco o nero Ø 28 mm.
Black or white ABS Ø 28 mm.
ABS blanc ou noir Ø 28 mm.
ABS Weiss oder Schwarz Ø 28 mm.

COPRITESTA - COVER UP - CACHE - DECKSCHRAUBE AUS KUNSISTOFF

Bianco - beige - marrone - nero. White - beige - brown - black.
Blanc - beige - marron - noir. Weiss - Beige - Braun - Schwarz.

REGOLAZIONE - ADJUSTMENT - REGLAGE - REGULIERUNG

132 Esterna. Outside. **132/A** Interna, esterna. Inside, outside.
Extérieur. Aeusser. Intérieur, extérieur. Inner, Aeusser.

ART. 133 - 133/A

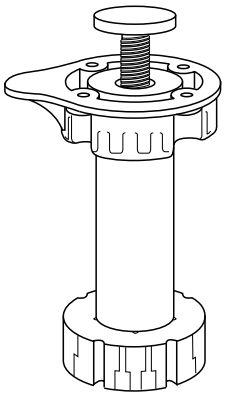

133

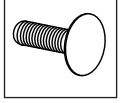

133/A

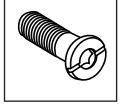

ALTEZZA - HEIGHT - HAUTÊR - HÖHE

100 ÷ 120 ÷ 150 ÷ 200 mm

FISSAGGIO - FIXING - FIXAGE - FIXIERUNG

Viti 10MA standard o forata, o viti per legno.
10MA standard or socket head screws or wood screws.
Vis 10MA standard ou à tête forée ou vis à bois.
10MA Schrauben, Standard oder mit Bohrung, oder Holzschrauben.

MATERIALE - MATERIAL - MATIÉRE - MATERIAL

Acciaio zincato Ø 28 mm. Piastra smontabile in ABS e regolazione in ABS.
Zinc-coated steel Ø 28 mm. Demountable plate and regulation in ABS.
Acier zingué Ø 28 mm. Plaque démontable et regulation en ABS.
Verzinktstahl Ø 28 mm. Abnehmbare Platte und Einstellung aus ABS.

COPRITESTA - COVER UP - CACHE - DECKSCHRAUBE AUS KUNSISTOFF

Bianco - beige - marrone - nero. White - beige - brown - black.
Blanc - beige - marron - noir. Wiess - Beige - Braun - Schwarz.

REGOLAZIONE - ADJUSTMENT - REGLAGE - REGULIERUNG

133 Esterna. Outside. **133/A** Interna, esterna. Inside, outside.
Extérieur. Aeusser. Intérieur, extérieur. Inner, Aeusser.

ART. 134 - 134/A

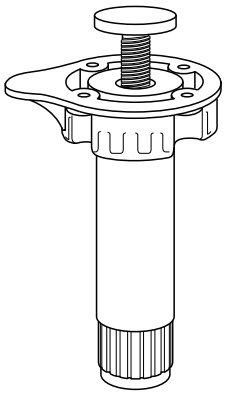

134

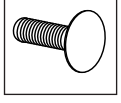

134/A

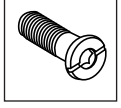

ALTEZZA - HEIGHT - HAUTÊR - HÖHE

100 ÷ 120 ÷ 150 ÷ 200 mm

FISSAGGIO - FIXING - FIXAGE - FIXIERUNG

Viti 10MA standard o forata, o viti per legno.
10MA standard or socket head screws or wood screws.
Vis 10MA standard ou à tête forée ou vis à bois.
10MA Schrauben, Standard oder mit Bohrung, oder Holzschrauben.

MATERIALE - MATERIAL - MATIÉRE - MATERIAL

Acciaio zincato Ø 28 mm. Piastra smontabile in ABS e regolazione in ABS.
Zinc-coated steel Ø 28 mm. Demountable plate and regulation in ABS.
Acier zingué Ø 28 mm. Plaque démontable et regulation en ABS.
Verzinktstahl Ø 28 mm. Abnehmbare Platte und Einstellung aus ABS.

COPRITESTA - COVER UP - CACHE - DECKSCHRAUBE AUS KUNSISTOFF

Bianco - beige - marrone - nero. White - beige - brown - black.
Blanc - beige - marron - noir. Wiess - Beige - Braun - Schwarz.

REGOLAZIONE - ADJUSTMENT - REGLAGE - REGULIERUNG

134 Esterna. Outside. **134/A** Interna, esterna. Inside, outside.
Extérieur. Aeusser. Intérieur, extérieur. Inner, Aeusser.

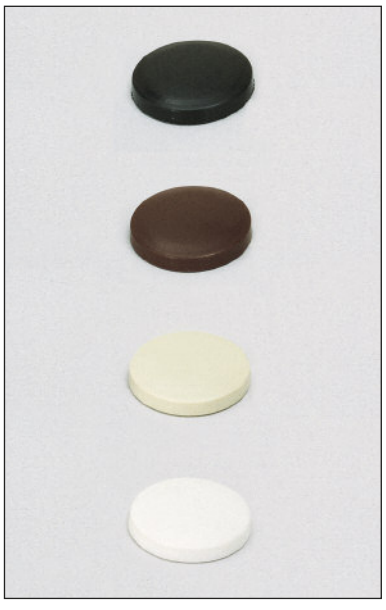

COPRITESTA

PER VITI STANDARD E FORATA

Copritesta per viti standard o forata.
Screw cover for standard and socket head screws.
Capuchon pour vis standard ou vis à tête forée.
Kopfdeckel für Standardschrauben oder schrauben mit Bohrung.

COLORI - COLOURS - COULEURS - COLOURS

Bianco - beige - marrone - nero.
Blanc - beige - marron - noir.

White - beige - brown - black.
Wiess - Beige - Braun - Schwarz.

VITE FORATA

10MA x 33

Vite 10MA x 33 forata.
10MA x 33 socket head screw.
Vis 10MA x 33 à tête forée.
Schraube 10MA x 33 mit Bohrung.

VITE STANDARD

10MA x 35

Vite 10MA x 33 STANDARD.
10MA x 33 STANDARD screw.
Vis 10MA x 33 STANDARD.
Schraube 10MA x 33 STANDARD.

REGOLABILE

Ø 50 PER ART. 116-117-118

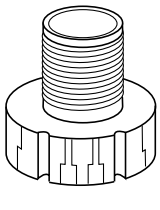

Piede regolabile Ø 50 mm, disponibile per articoli 116 - 117 - 118, su richiesta.
Ø 50 mm adjustable foot, available for articles 116 - 117 - 118upon request.
Pied réglable Ø 50 mm disponible sur demande, pourles articles 116 - 117 - 118.
Regulierbarer Fuß, Ø 50 mm, auf Anfrage für dieArtikel 116 - 117 - 118 verfügbar.

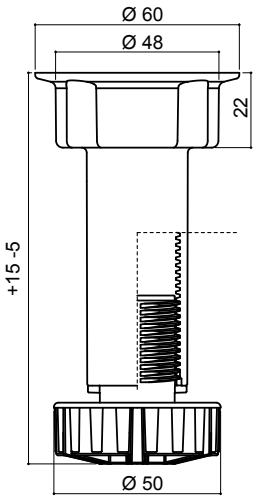

ART. 138

ALTEZZA - HEIGHT - HAUTÊR - HÖHE

100 - 120 - 150 mm.

FISSAGGIO - FIXING - FIXAGE - FIXIERUNG

Viti 10MA standard, o viti per legno.
10MA standard or wood screws.
Vis 10MA standard ou vis à bois.
10MA Schrauben, oder Holzschrauben.

MATERIALE - MATERIAL - MATIÈRE - MATERIAL

Polistirolo nero.
Black polystyrene.
Polystyrène noir.
Polystyrol schwarz.

REGOLAZIONE - ADJUSTEMENT - REGLAGE - REGULIERUNG

Esterna.
Outside.
Extérieur.
Aeusser.

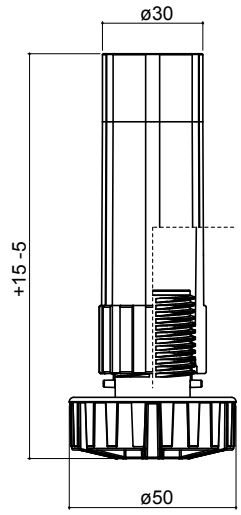

ART. 139

ALTEZZA - HEIGHT - HAUTÊR - HÖHE

60 - 80 - 100 - 120 - 150 - 165 mm.

FISSAGGIO - FIXING - FIXAGE - FIXIERUNG

Piastra triangolare, con piolo, smontabile.
Triangular plate, with pin, detachable.
Plaque triangulaire, avec broche, détachable.
Dreieckige Platte, mit Stift, abnehmbar.

MATERIALE - MATERIAL - MATIÈRE - MATERIAL

Polistirolo nero.
Black polystyrene.
Polystyrène noir.
Polystyrol schwarz.

REGOLAZIONE - ADJUSTEMENT - REGLAGE - REGULIERUNG

Esterna.
Outside.
Extérieur.
Aeusser.

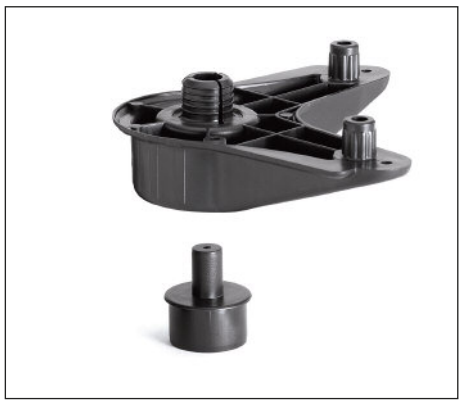

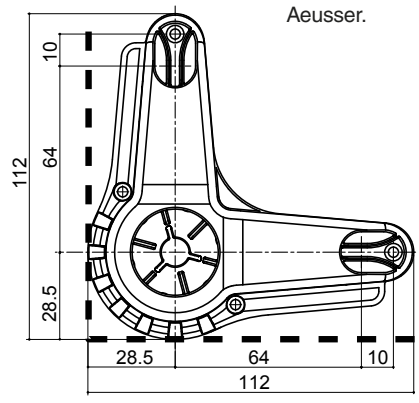

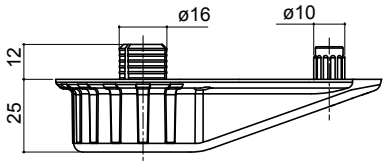

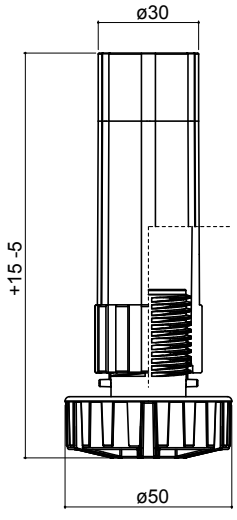

ART. 144

ALTEZZA - HEIGHT - HAUTÊR - HÖHE

60 - 80 - 100 - 120 - 150 - 165 mm.

FISSAGGIO - FIXING - FIXAGE - FIXIERUNG

Piastra ovale, smontabile.
Oval plate, detachable.
Plaque ovale, demontable.
Ovalen Platte Platte, Zerlegbares.

MATERIALE - MATERIAL - MATIÈRE - MATERIAL

Polistirolo nero.
Black polystyrene.
Polystyrène noir.
Polystyrol schwarz.

REGOLAZIONE - ADJUSTEMENT - REGLAGE - REGULIERUNG

Esterna.
Outside.
Extérieur.
Aeusser.

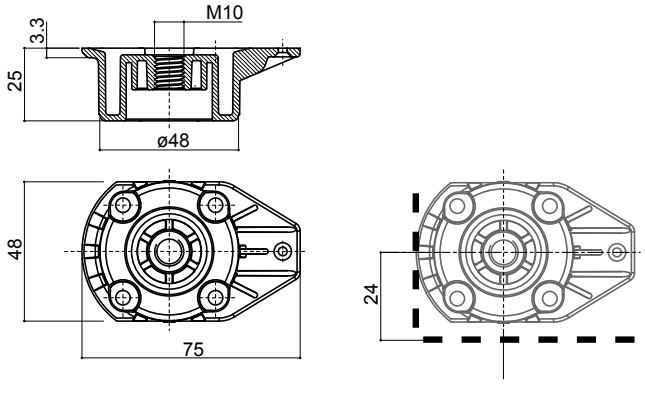

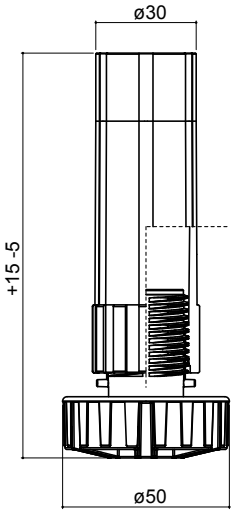

ART. 145

ALTEZZA - HEIGHT - HAUTÊR - HÖHE

60 - 80 - 100 - 120 - 150 - 165 mm.

FISSAGGIO - FIXING - FIXAGE - FIXIERUNG

Piastra ovale, con piolo, smontabile.
Oval plate, with pin, detachable.
Plaque ovale, avec broche, détachable.
Ovalen Platte, mit Stift, abnehmbar.

MATERIALE - MATERIAL - MATIÈRE - MATERIAL

Polistirolo nero.
Black polystyrene.
Polystyrène noir.
Polystyrol schwarz.

REGOLAZIONE - ADJUSTEMENT - REGLAGE - REGULIERUNG

Esterna.
Outside.
Extérieur.
Aeusser.

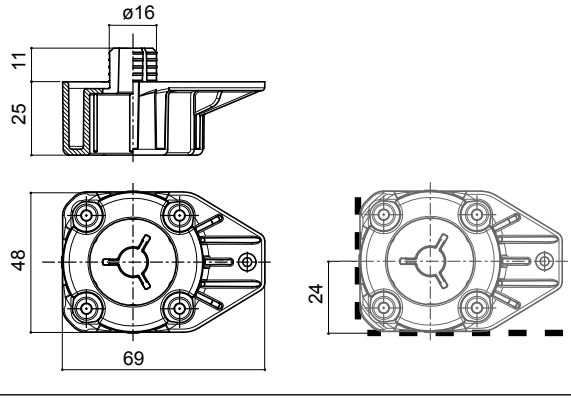

MANART srl - 23876 MONTICELLO - FRAZ. CORTENUOVA (LC) ITALY - Via T. Moneta, 17 - Tel. 039.920.35.55 - 039.920.26.44 - Fax 039.920.28.01
www.manart.it e-mail: manart@manart.it

ART. 201

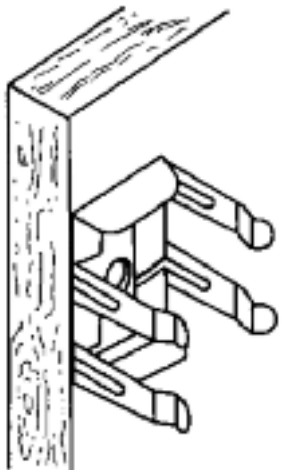

FISSAGGIO - FIXING - FIXAGE - FIXIERUNG

Gancio fissaggio mm 55 per zoccolo in legno
Fixing hook mm 55 for wooden suppor
Crochet de fixation mm 55 pour support en bois
Befestigungshaken mm 55 fuer Auflager aus Holz

MATERIALE - MATERIAL - MATIÈRE - MATERIAL

Acciaio zincato per tubo Ø 28 mm
Zinc-coated steel for tube Ø 28 mm
Acier zingué pour tube Ø 28 mm
Verzinktstahl für Rohr Ø 28 mm

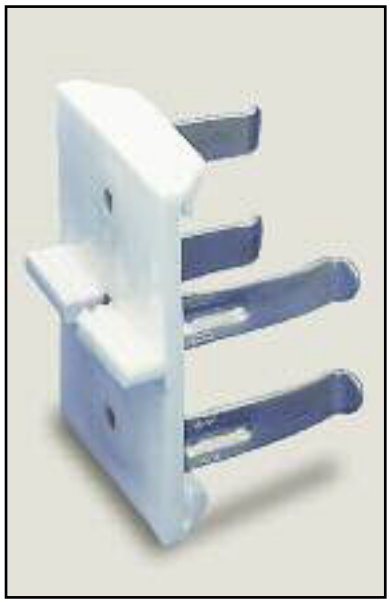

ART. 202

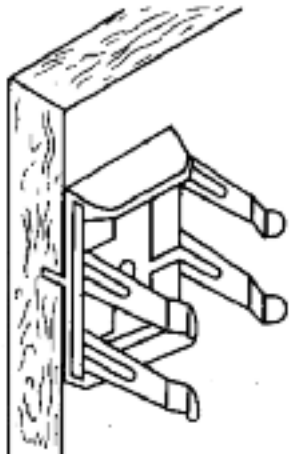

FISSAGGIO - FIXING - FIXAGE - FIXIERUNG

Gancio fissaggio mm 50 per zoccolo in legno
Fixing hook mm 50 for wooden suppor
Crochet de fixation mm 50 pour support en bois
Befestigungshaken mm 50 fuer Auflager aus Holz

MATERIALE - MATERIAL - MATIÈRE - MATERIAL

Acciaio zincato e piastra in materiale plastico per tubo Ø 28 mm
Zinc-coated steel and plastic plate for tube Ø 28 mm
Acier zingué et plaque en plastique pour tube Ø 28 mm
Verzinktstahl und Platte aus Plastik für Rohr Ø 28 mm

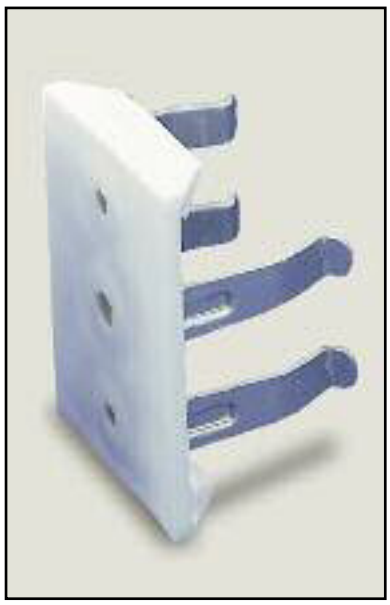

ART. 203

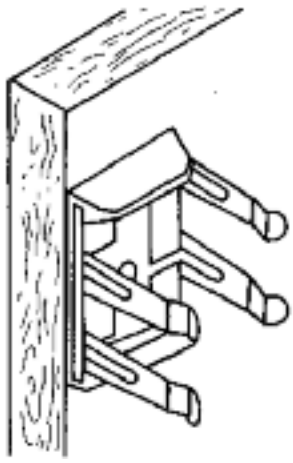

FISSAGGIO - FIXING - FIXAGE - FIXIERUNG

Gancio fissaggio mm 50 per zoccolo in legno
Fixing hook mm 50 for wooden suppor
Crochet de fixation mm 50 pour support en bois
Befestigungshaken mm 50 fuer Auflager aus Holz

MATERIALE - MATERIAL - MATIÈRE - MATERIAL

Acciaio zincato e piastra in materiale plastico per tubo Ø 28 mm
Zinc-coated steel and plastic plate for tube Ø 28 mm
Acier zingué et plaque en plastique pour tube Ø 28 mm
Verzinktstahl und Platte aus Plastik für Rohr Ø 28 mm

ART. 204

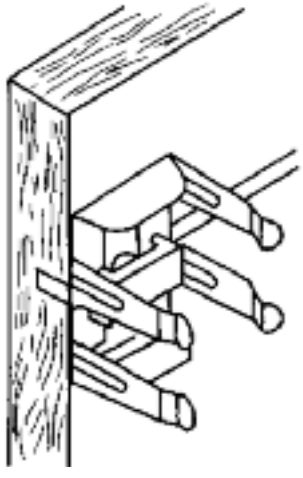

FISSAGGIO - FIXING - FIXAGE - FIXIERUNG

Gancio fissaggio mm 55 per zoccolo in legno
Fixing hook mm 55 for wooden suppor
Crochet de fixation mm 55 pour support en bois
Befestigungshaken mm 55 fuer Auflager aus Holz

MATERIALE - MATERIAL - MATIÈRE - MATERIAL

Acciaio zincato per tubo Ø 28 mm - ancora di fissaggio in nylon
Zinc-coated steel for tube Ø 28 mm - nylon fixing anchor
Acier zingué pour tube Ø 28 mm - ancre de fixation en nylon
Verzinktstahl für Rohr Ø 28 mm - Befestigungsanker aus nylon

ART. 205

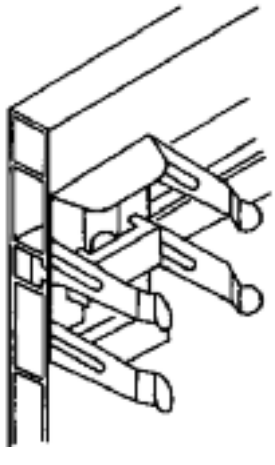

FISSAGGIO - FIXING - FIXAGE - FIXIERUNG

Gancio fissaggio mm 55 per zoccolo in resina o alluminio
Fixing hook mm 55 for suppor in plastic or alluminium
Crochet de fixation mm 55 pour support en plastique ou aluminium
Befestigungshaken mm 55 fuer Plastik-oder Aluminium Auflager

MATERIALE - MATERIAL - MATIÈRE - MATERIAL

Acciaio zincato per tubo Ø 28 mm - ancora di fissaggio in nylon
Zinc-coated steel for tube Ø 28 mm - nylon fixing anchor
Acier zingué pour tube Ø 28 mm - ancre de fixation en nylon
Verzinktstahl für Rohr Ø 28 mm - Befestigungsanker aus nylon

ART. 206

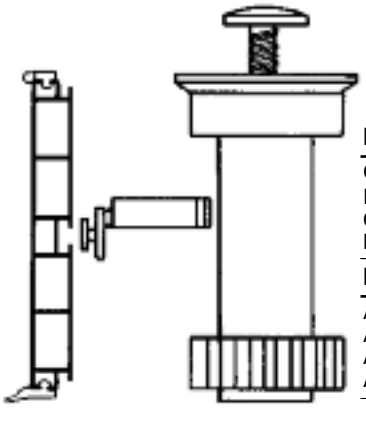

FISSAGGIO - FIXING - FIXAGE - FIXIERUNG

Gancio fissaggio per zoccolo in resina o alluminio
Fixing hook for suppor in plastic or alluminium
Crochet de fixation pour support en plastique ou aluminium
Befestigungshaken fuer Plastik-oder Aluminium Auflager

MATERIALE - MATERIAL - MATIÈRE - MATERIAL

ABS per tubo Ø 28 mm
ABS for tube Ø 28 mm
ABS pour tube Ø 28 mm
ABS für Rohr Ø 28 mm

ART. 207

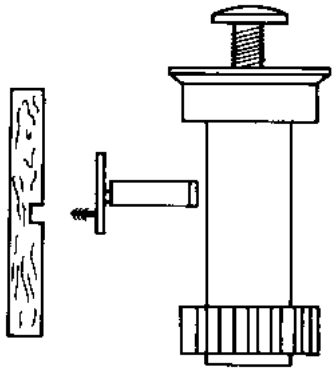

FISSAGGIO - FIXING - FIXAGE - FIXIERUNG

Gancio fissaggio per zoccolo in legno
Fixing hook for wooden suppor
Crochet de fixation pour support en bois
Befestigungshaken fuer Auflager aus Holz

MATERIALE - MATERIAL - MATIÈRE - MATERIAL

ABS per tubo Ø 28 mm
ABS for tube Ø 28 mm
ABS pour tube Ø 28 mm
ABS für Rohr Ø 28 mm

ART. 208

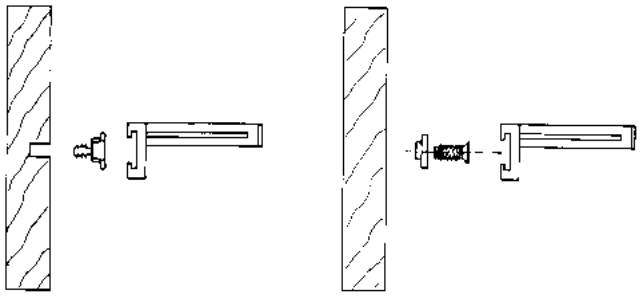

FISSAGGIO - FIXING - FIXAGE - FIXIERUNG

Gancio fissaggio per zoccolo in legno
Fixing hook for wooden suppor
Crochet de fixation pour support en bois
Befestigungshaken fuer Auflager aus Holz

MATERIALE - MATERIAL - MATIÈRE - MATERIAL

ABS per tubo Ø 28 mm
ABS for tube Ø 28 mm
ABS pour tube Ø 28 mm
ABS für Rohr Ø 28 mm

ART. 3

ALTEZZA - HEIGHT - HAUTER - HÖHE

100 ÷ 350 mm

FISSAGGIO - FIXING - FIXAGE - FIXIERUNG

Piastra rotonda Ø 50 mm - vite 10MA
Round plate Ø 50 mm - screw 10MA
Plaque ronde Ø 50 mm - vis 10MA
Rundplatte Ø 50 mm - Schraube 10MA

MATERIALE - MATERIAL - MATIÈRE - MATERIAL

Tubo acciaio cromato, satinato, verniciato Ø 25 mm
Tube in chrome plated steel, satined or lacquered steel size Ø 25 mm
Tube en acier chromé, satiné ou laqué taille Ø 25 mm
Verchromt, satiniert oder lackiert Stahl Ø 25 mm

REGOLAZIONE - ADJUSTEMENT - REGLAGE - REGULIERUNG

Esterna con regolabile
Outside with regulation
Extérieur avec regulation
Aeusser mit Einstellung

ART. 5/A

ALTEZZA - HEIGHT - HAUTER - HÖHE

100 ÷ 800 mm

FISSAGGIO - FIXING - FIXAGE - FIXIERUNG

Piastra quadrata fissa 60x60 mm
Fixed square plate size 60x60 mm
Plaque carrée fixe taille 60x60 mm
Vierkante befestigte Platte 60x60 mm

MATERIALE - MATERIAL - MATIÈRE - MATERIAL

Tubo acciaio 25x25 mm cromato o verniciato. Tappo gomma
Tube in chrome-plated steel or lacquered steel size 25x25 mm. Rubber plug
Tube en acier 25x25 chromé ou laqué taille 25x25 mm. Bouchon en caouchouc
Verchromter oder lackierter Stahl 25x25 mm. Gummipfropfen

ART. 5/B

ALTEZZA - HEIGHT - HAUTER - HÖHE

100 ÷ 800 mm

FISSAGGIO - FIXING - FIXAGE - FIXIERUNG

Piastra quadrata fissa 60x60 mm
Fixed square plate size 60x60 mm
Plaque carrée fixe taille 60x60 mm
Vierkante befestigte Platte 60x60 mm

MATERIALE - MATERIAL - MATIÈRE - MATERIAL

Tubo acciaio 25x25 mm cromato o verniciato. Tappo gomma
Tube in chrome-plated steel or lacquered steel size 25x25 mm. Rubber plug
Tube en acier chromé ou laqué taille 25x25 mm. Bouchon en caoutchouc
Verchromter oder lackierter Stahl 25x25 mm. Gummipfropfen

REGOLAZIONE - ADJUSTEMENT - REGLAGE - REGULIERUNG

Esterna con regolabile
Outside with regulation
Extérieur avec regulation
Aeussere mit Einstellung

MANART srl - 23876 MONTICELLO (LC) - Via T. Moneta, 17 - Fraz. Cortenuova - Tel. 039.9203555 - 039.9202644 - Fax 039.9202801
e-mail: manart@manart.it - www.manart.it

ART. 5/C

ALTEZZA - HEIGHT - HAUTER - HÖHE

100 ÷ 800 mm

FISSAGGIO - FIXING - FIXAGE - FIXIERUNG

Piastra quadrata fissa 60x60 mm
Fixed square plate size 60x60 mm
Plaque carrée fixe taille 60x60 mm
Vierkant befestigte Platte 60x60 mm

MATERIALE - MATERIAL - MATIÈRE - MATERIAL

Tubo acciaio 25x25 mm cromato o verniciato. Tappo zama
Tube chrome-plated steel or lacquered steel size 25x25 mm. Zamak plug
Tube en acier chromé ou laqué taille 25x25 mm. Bouchon en zama
Verchromt oder lackiert Stahl 25x25 mm. Zamapfropfen

REGOLAZIONE - ADJUSTEMENT - REGLAGE - REGULIERUNG

Esterna con regolabile
Outside with regulation
Extérieur avec regulation
Aeusser mit Einstellung

ART. 7

ALTEZZA - HEIGHT - HAUTER - HÖHE

100 ÷ 800 mm

FISSAGGIO - FIXING - FIXAGE - FIXIERUNG

Piastra quadrata fissa 60x60 mm
Fixed square plate 60x60 mm
Plaque carrée fixe 60x60 mm
Befestigte vierkante Platte 60x60 mm

MATERIALE - MATERIAL - MATIÈRE - MATERIAL

Tubo acciaio cromato satinato o verniciato Ø 25 mm. Tappo gomma
Tube in chrome-plated steel, satined or lacquered steel size Ø 25 mm - rubber plug
Tube en acier chromé, satiné ou laqué taille Ø 25 mm -
bouchon en caoutchouc
Verchromt, satiniert oder lackiert Stahl Ø 25 mm - Gummipfropfen

REGOLAZIONE - ADJUSTEMENT - REGLAGE - REGULIERUNG

Esterna con regolabile
Outside with regulation
Extérieur avec regulation
Aeusser mit Einstellung

ART. 9/A

ALTEZZA - HEIGHT - HAUTER - HÖHE

100 ÷ 800 mm

FISSAGGIO - FIXING - FIXAGE - FIXIERUNG

Piastra triangolare 90 x 90 x 120 mm
Triangular plate 90 x 90 x 120 mm
Plaque triangulaire 90 x 90 x 120 mm
Dreieckige Platte 90 x 90 x 120 mm

MATERIALE - MATERIAL - MATIÈRE - MATERIAL

Tubo acciaio cromato, satinato verniciato Ø 25 mm
Tube in chrome-plated steel, satined or lacquered steel Ø 25 mm
Tube en acier chromé, satiné ou laqué Ø 25 mm
Verchromt, satiniert oder lackiert Stahl Ø 25 mm

REGOLAZIONE - ADJUSTEMENT - REGLAGE - REGULIERUNG

Esterna con regolabile
Outside with regulation
Extérieur avec regulation
Aeusser mit Einstellung

ART. 9/B

ALTEZZA - HEIGHT - HAUTER - HÖHE

100 ÷ 800 mm

FISSAGGIO - FIXING - FIXAGE - FIXIERUNG

Piastra quadrata fissa 60x60 mm
Fixed square plate 60x60 mm
Plaque carrée fixe 60x60 mm
Befestigte vierkant Platte 60x60 mm

MATERIALE - MATERIAL - MATIÈRE - MATERIAL

Tubo acciaio cromato, satinato verniciato Ø 25 mm
Tube in chrome-plated steel, satined or lacquered steel Ø 25 mm
Tube en acier chromé, satiné ou laqué Ø 25 mm
Verchromt, satiniert oder lackiert Stahl Ø 25 mm

REGOLAZIONE - ADJUSTEMENT - REGLAGE - REGULIERUNG

Esterna con regolabile
Outside with regulation
Extérieur avec regulation
Aeusser mit Einstellung

ART. 19/A

ALTEZZA - HEIGHT - HAUTER - HÖHE

100 ÷ 350 mm

FISSAGGIO - FIXING - FIXAGE - FIXIERUNG

Piastra rotonda Ø 70 mm - Vite 10MA
Round plate Ø 70 mm - 10MA screw
Plaque ronde Ø 70 mm - Vis 10MA
Rundplatte Ø 70 mm - 10MA Schraube

MATERIALE - MATERIAL - MATIÈRE - MATERIAL

Tubo acciaio cromato, satinato, verniciato Ø 50 mm
Tube in chrome plated steel, satined or lacquered steel size Ø 50 mm
Tube en acier chromé, satiné ou laqué taille Ø 50 mm
Verchromt, satiniert oder lackiert Stahl Ø 50 mm

REGOLAZIONE - ADJUSTEMENT - REGLAGE - REGULIERUNG

Esterna con regolabile
Outside with regulation
Extérieur avec regulation
Aeusser mit Einstellung

ART. 114

ALTEZZA - HEIGHT - HAUTER - HÖHE

100 ÷ 200 mm

FISSAGGIO - FIXING - FIXAGE - FIXIERUNG

Piastra rotonda Ø 50 mm - Vite 10MA
Round plate Ø 50 mm - 10MA screw
Plaque ronde Ø 50 mm - Vis 10MA
Rundplatte Ø 50 mm - 10MA Schraube

MATERIALE - MATERIAL - MATIÈRE - MATERIAL

Tubo acciaio cromato, satinato o verniciato Ø 35 mm - Regolabile in ABS
Tube chrome-plated steel, satined or lacquered Ø 35 mm - Regulation in ABS
Tube en acier chromé, satiné ou laqué Ø 35 mm - Regulation en ABS
Verchromt, satiniert, lackiert Stahl Ø 35 mm - Einstellung aus ABS

REGOLAZIONE - ADJUSTEMENT - REGLAGE - REGULIERUNG

Esterna con regolabile
Outside with regulation
Extérieur avec regulation
Aeusser mit Einstellung

ART. 115

ALTEZZA - HEIGHT - HAUTER - HÖHE

90 ÷ 120 mm
110 ÷ 160 mm

FISSAGGIO - FIXING - FIXAGE - FIXIERUNG

Piastra rotonda Ø 60 mm - Vite 10MA x 15 mm
Round plate Ø 60 mm - screw 10MA x 15 mm
Plaque ronde Ø 60 mm - Vis 10MA x 15 mm
Rundplatte Ø 60 mm - Schraube 10MA x 15 mm

MATERIALE - MATERIAL - MATIÈRE - MATERIAL

Tubo acciaio cromato, satinato, verniciato Ø 42 mm
Tube in chrome plated steel, satined or lacquered steel size Ø 42 mm
Tube en acier chromé, satiné ou laqué Ø 42 mm
Verchromt, satiniert oder lackiert Stahl Ø 42 mm

REGOLAZIONE - ADJUSTEMENT - REGLAGE - REGULIERUNG

Esterna con regolabile
Outside with regulation
Extérieur avec regulation
Aeusser mit Einstellung

ART. 120

ALTEZZA - HEIGHT - HAUTER - HÖHE

100 ÷ 200 mm

FISSAGGIO - FIXING - FIXAGE - FIXIERUNG

Piastra rotonda Ø 50 mm - Vite 10MA
Round plate Ø 50 mm - 10MA screw
Plaque ronde Ø 50 mm - Vis 10MA
Rundplatte Ø 50 mm - 10MA Schraube

MATERIALE - MATERIAL - MATIÈRE - MATERIAL

Tubo acciaio cromato, satinato o verniciato Ø 35 mm - Regolabile in ABS
Tube chrome-plated steel, satined or lacquered Ø 35 mm - Regulation in ABS
Tube en acier chromé, satiné ou laqué Ø 35 mm - Regulation en ABS
Verchromt, satiniert, lackiert Stahl Ø 35 mm - Einstellung aus ABS

REGOLAZIONE - ADJUSTEMENT - REGLAGE - REGULIERUNG

Esterna con regolabile
Outside with regulation
Extérieur avec regulation
Aeusser mit Einstellung

ART. 122 F

TAPPO GOMMA

ART. 122 R

REGOLABILE

ALTEZZA - HEIGHT - HAUTER - HÖHE

100 ÷ 350 mm

FISSAGGIO - FIXING - FIXAGE - FIXIERUNG

Perno saldato 8MA o 10MA varie lunghezze o vite a cappello
Joined pin 8MA, 10MA for different lenghts or cap screw
Pivot soudé 8MA, 10MA pour différentes longueurs ou vis
Geloeteter Stifte 8MA, 10MA fuer verschiedene Laengen oder Schraube

MATERIALE - MATERIAL - MATIÈRE - MATERIAL

Tubo acciaio cromato, satinato, verniciato. Ø 60 mm. Tappo gomma
Tube chrome-plated steel, satined or lacquered. Ø 60 mm. Rubber plug
Tube en acier chromé, satiné ou laqué. Ø 60 mm. Bouchon en caouchouc
Verchromt, satiniert, lackiert Stahl. Ø 60 mm. Gummipfropfen

REGOLAZIONE - ADJUSTEMENT - REGLAGE - REGULIERUNG

Esterna con regolabile
Outside with regulation
Extérieur avec regulation
Aeusser mit Einstellung

ART. 123 Ø 30

ALTEZZA - HEIGHT - HAUTER - HÖHE

100 ÷ 800 mm

FISSAGGIO - FIXING - FIXAGE - FIXIERUNG

Piastra quadrata fissa 60x60 mm
Fixed square plate size 60x60 mm
Plaque carrée fixe taille 60x60 mm
Vierkant befestigte Platte 60x60 mm

MATERIALE - MATERIAL - MATIÈRE - MATERIAL

Tubo acciaio cromato, satinato, verniciato Ø 30 mm. Tappo gomma
Tube chrome-plated steel, satined, lacquered steel Ø 30 mm. Rubber plug
Tube en acier chromé, satiné, laqué Ø 30 mm. Bouchon en caouchouc
Verchromt, satiniert, lackiert Stahl Ø 30 mm. Gummipfropfen

REGOLAZIONE - ADJUSTEMENT - REGLAGE - REGULIERUNG

Esterna con regolabile
Outside with regulation
Extérieur avec regulation
Aeusser mit Einstellung

ART. 123 Ø 35

ALTEZZA - HEIGHT - HAUTER - HÖHE

100 ÷ 800 mm

FISSAGGIO - FIXING - FIXAGE - FIXIERUNG

Piastra quadrata fissa 60x60 mm.
Fixed square plate size 60x60 mm.
Plaque carrée fixe taille 60x60 mm.
Vierkant befestigte Platte 60x60 mm.

MATERIALE - MATERIAL - MATIÈRE - MATERIAL

Tubo acciaio cromato, satinato o verniciato Ø 35 mm - Tappo gomma
Tube chrome-plated steel, satined or lacquered steel Ø 35 mm - Rubber plug
Tube acier chromé, satiné ou laqué Ø 35 mm - Bouchon en caouchouc
Verchromt, satiniert oder lackiert Stahl Ø 35 mm - Gummipfropfen

REGOLAZIONE - ADJUSTEMENT - REGLAGE - REGULIERUNG

Esterna con regolabile
Outside with regulation
Extérieur avec regulation
Aeusser mit Einstellung

ART. 124

PIEDINO DISTANZIALE TRA DUE PIANI
SPACER FOOT BETWEEN TWO LEVELS
PETIT PIED DE DISTANCIATION ENTRE DEUX SURFACES
FUSS ENTFERNUNGSTUCK ZWISCHEN ZWEI PLATTEN

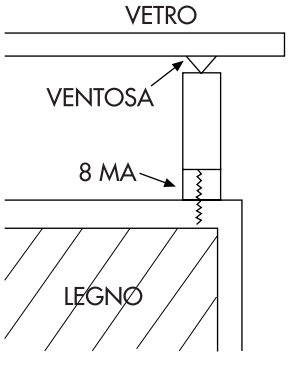

ALTEZZA - HEIGHT - HAUTER - HÖHE

100 ÷ 350 mm

FISSAGGIO - FIXING - FIXAGE - FIXIERUNG

Innesto con filetto 8 MA e ventosa Ø 25 mm
Coupling with 8 MA thread and suction pad Ø 25 mm.
Embrayage avec filet 8 MA et ventose Ø 25 mm.
Kupplung mit Gewinde 8 MA und Saugnapf Ø 25 mm.

MATERIALE - MATERIAL - MATIÈRE - MATERIAL

Tubo acciaio cromato, satinato o verniciato Ø 35 mm. Innesto in ABS.
Tube chrome-plated steel, satined or lacquered steel Ø 35 mm. ABS coupling
Tube acier chromé, satiné ou laqué Ø 35 mm. Embrayage en ABS
Verchromt, satiniert oder lackiert Stahl Ø 35 mm. ABS kupplung

MANART srl - 23876 MONTICELLO (LC) - Via T. Moneta, 17 - Fraz. Cortenuova - Tel. 039.9203555 - 039.9202644 - Fax 039.9202801
e-mail: manart@manart.it - www.manart.it

ART. 125

PIEDINO DISTANZIALE TRA DUE PIANI
SPACER FOOT BETWEEN TWO LEVELS
PETIT PIED DE DISTANCIATION ENTRE DEUX SURFACES
FUSS ENTFERNUNGSTUCK ZWISCHEN ZWEI PLATTEN

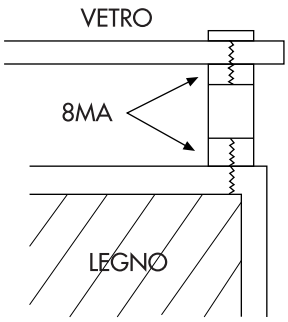

ALTEZZA - HEIGHT - HAUTER - HÖHE

100 ÷ 350 mm

FISSAGGIO - FIXING - FIXAGE - FIXIERUNG

Innesto con filetto 8 MA e borchia con perno 8 MAx25 mm.
Coupling with 8 MA thread and Knob with pin 8 MAx25 mm.
Embrayage avec filet 8 MA et garniture avec pivot 8 MAx25 mm.
Kupplung mit Gewinde 8 MA und Beschlag mit Zapfen 8 MAx25 mm.

MATERIALE - MATERIAL - MATIÈRE - MATERIAL

Tubo acciaio cromato, satinato o verniciato Ø 35 mm. Innesto in ABS.
Tube chrome-plated steel, satined or lacquered steel Ø 35 mm. ABS coupling
Tube acier chromé, satiné ou laqué Ø 35 mm. Embrayage en ABS.
Verchromt, satiniert oder lackiert Stahl Ø 35 mm. ABS Kupplung.

ART. 126

ALTEZZA - HEIGHT - HAUTER - HÖHE

150 ÷ 700 mm

FISSAGGIO - FIXING - FIXAGE - FIXIERUNG

Piastra quadrata fissa 60x60 mm
Fixed square plate 60x60 mm
Plaque carrée fixe 60x60 mm
Befestigte vierkant Platte 60x60 mm

MATERIALE - MATERIAL - MATIÈRE - MATERIAL

Tubo acciaio cromato, satinato verniciato Ø 30 mm
Tube in chrome-plated steel, satined or lacquered steel Ø 30 mm
Tube en acier chromé, satiné ou laqué Ø 30 mm
Verchromt, satiniert oder lackiert Stahl Ø 30 mm

REGOLAZIONE - ADJUSTEMENT - REGLAGE - REGULIERUNG

Esterna con regolabile
Outside with regulation
Extérieur avec regulation
Aeusser mit Einstellung

ART. 127

ALTEZZA - HEIGHT - HAUTER - HÖHE

150 ÷ 350 mm

FISSAGGIO - FIXING - FIXAGE - FIXIERUNG

Piastra rotonda Ø 60 mm - vite 10MA
Round plate Ø 60 mm - screw 10MA
Plaque ronde Ø 60 mm - vis 10MA
Roundplatte Ø 60 mm - Schraube 10MA

MATERIALE - MATERIAL - MATIÈRE - MATERIAL

Tubo acciaio cromato, satinato, verniciato Ø 30 mm
Tube in chrome plated steel, satined or lacquered steel size Ø 30 mm
Tube en acier chromé, satiné ou laqué taille Ø 30 mm
Verchromt, satiniert oder lackiert Stahl Ø 30 mm

REGOLAZIONE - ADJUSTEMENT - REGLAGE - REGULIERUNG

Esterna con regolabile
Outside with regulation
Extérieur avec regulation
Aeusser mit Einstellung

ART. 128

ALTEZZA - HEIGHT - HAUTER - HÖHE

150 ÷ 350 mm

FISSAGGIO - FIXING - FIXAGE - FIXIERUNG

Piastra rotonda Ø 70 mm - vite 10MA
Round plate Ø 70 mm - screw 10MA
Plaque ronde Ø 70 mm - vis 10MA
Roundplatte Ø 70 mm - Schraube 10MA

MATERIALE - MATERIAL - MATIÈRE - MATERIAL

Tubo acciaio cromato, satinato, verniciato Ø 50 mm
Tube in chrome plated steel, satined or lacquered steel size Ø 50 mm
Tube en acier chromé, satiné ou laqué taille Ø 50 mm
Verchromt, satiniert oder lackiert Stahl Ø 50 mm

REGOLAZIONE - ADJUSTEMENT - REGLAGE - REGULIERUNG

Esterna con regolabile
Outside with regulation
Extérieur avec regulation
Aeusser mit Einstellung

ART. 129

ALTEZZA - HEIGHT - HAUTER - HÖHE

150 ÷ 350 mm

FISSAGGIO - FIXING - FIXAGE - FIXIERUNG

Piastra triangolare 122x122x122 mm - saldata
Triangular plate 122x122x122 mm - welded
Plaque triangulaire 122x122x122 mm - soudée
Dreieckige Platte 122x122x122 mm - geschweisst

MATERIALE - MATERIAL - MATIÈRE - MATERIAL

Tubo acciaio cromato, satinato, verniciato Ø 50 mm
Tube in chrome plated steel, satined or lacquered steel size Ø 50 mm
Tube en acier chromé, satiné ou laqué taille Ø 50 mm
Verchromt, satiniert oder lackiert Stahl Ø 50 mm

REGOLAZIONE - ADJUSTEMENT - REGLAGE - REGULIERUNG

Esterna con regolabile
Outside with regulation
Extérieur avec regulation
Aeusser mit Einstellung

ART. 140

ALTEZZA - HEIGHT - HAUTER - HÖHE

150 ÷ 350 mm

FISSAGGIO - FIXING - FIXAGE - FIXIERUNG

Piastra rotonda Ø 70 mm - vite 10MA
Round plate Ø 70 mm - screw 10MA
Plaque ronde Ø 70 mm - vis 10MA
Rundplatte Ø 70 mm - Schraube 10MA

MATERIALE - MATERIAL - MATIÈRE - MATERIAL

Tubo acciaio cromato, satinato, verniciato Ø 60 mm
Tube in chrome plated steel, satined or lacquered steel size Ø 60 mm
Tube en acier chromé, satiné ou laqué taille Ø 60 mm
Verchromt, satiniert oder lackiert Stahl Ø 60 mm

REGOLAZIONE - ADJUSTEMENT - REGLAGE - REGULIERUNG

Esterna con regolabile
Outside with regulation
Extérieur avec regulation
Aeusser mit Einstellung

ART. 141

ALTEZZA - HEIGHT - HAUTÊR - HÖHE

160 ÷ 350 mm

FISSAGGIO - FIXING - FIXAGE - FIXIERUNG

Piastra alluminio, 135x135x135 mm - smontabile
Aluminium plate, 135x135x135 mm - detachable
Aluminium plaque, 135x135x135 mm - demontable
Aluminium Platte, 135x135x135 mm - Zerlegbares

MATERIALE - MATERIAL - MATIÈRE - MATERIAL

Tubo acciaio cromato, satinato, verniciato Ø 60 mm
Tube in chrome plated steel, satined or lacquered steel size Ø 60 mm
Tube en acier chromé, satiné ou laqué taille Ø 60 mm
Verchromt, satiniert oder lackiert Stahl Ø 60 mm

REGOLAZIONE - ADJUSTEMENT - REGLAGE - REGULIERUNG

Esterna con regolabile
Outside with regulation
Extérieur avec regulation
Aeusser mit Einstellung

ART. 142

ALTEZZA - HEIGHT - HAUTÊR - HÖHE

150 ÷ 350 mm

FISSAGGIO - FIXING - FIXAGE - FIXIERUNG

Piastra triangolare 122x122x122 mm - saldata
Triangular plate 122x122x122 mm - welded
Plaque triangulaire 122x122x122 mm - soudée
Dreleckige Platte 122x122x122 mm - geschweisst

MATERIALE - MATERIAL - MATIÈRE - MATERIAL

Tubo acciaio cromato, satinato, verniciato Ø 60 mm
Tube in chrome plated steel, satined or lacquered steel size Ø 60 mm
Tube en acier chromé, satiné ou laqué taille Ø 60 mm
Verchromt, satiniert oder lackiert Stahl Ø 60 mm

REGOLAZIONE - ADJUSTEMENT - REGLAGE - REGULIERUNG

Esterna con regolabile
Outside with regulation
Extérieur avec regulation
Aeusser mit Einstellung

ART. 143

ALTEZZA - HEIGHT - HAUTÊR - HÖHE

100 ÷ 350 mm

FISSAGGIO - FIXING - FIXAGE - FIXIERUNG

Vite 10MA
10MA screw
Vis 10MA
10MA Schraube

MATERIALE - MATERIAL - MATIÈRE - MATERIAL

Tubo acciaio cromato, satinato, verniciato Ø 50 mm
Tube in chrome plated steel, satined or lacquered steel size Ø 50 mm
Tube en acier chromé, satiné ou laqué taille Ø 50 mm
Verchromt, satiniert oder lackiert Stahl Ø 50 mm

REGOLAZIONE - ADJUSTEMENT - REGLAGE - REGULIERUNG

Esterna con regolabile
Outside with regulation
Extérieur avec regulation
Aeusser mit Einstellung

ART. 135

ALTEZZA - HEIGHT - HAUTÊR - HÖHE

40/ 60/ 80/ 100 mm. Ø 60 mm

FISSAGGIO - FIXING - FIXAGE - FIXIERUNG

Vite 10MA
10MA screw
Vis 10MA
10MA Schraube

MATERIALE - MATERIAL - MATIÈRE - MATERIAL

Polipropilene.
Polypropylene
Polypropylène.
Polypropylen.

FINITURE - FINISHES - EXECUTIONS - AUSFUEHAUNGEN

Nero - black - noir - Schwarz

ART. 136

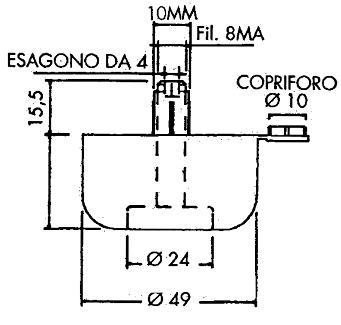

ALTEZZA - HEIGHT - HAUTÊR - HÖHE

17/ 27 / 44 mm Ø 49 mm

MATERIALE - MATERIAL - MATIÈRE - MATERIAL

Polipropilene.
Polypropylene
Polypropylène.
Polypropylen.

FINITURE - FINISHES - EXECUTIONS - AUSFUEHAUNGEN

Nero, alluminio - black, aluminium - noir, aluminium - Schwarz, Aluminium

ART. 137

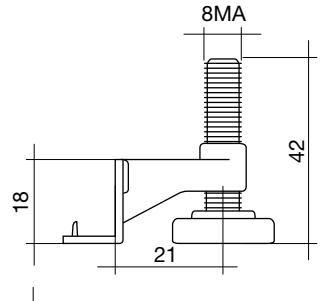

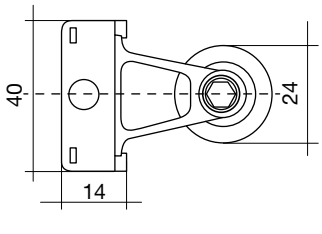

ALTEZZA - HEIGHT - HAUTÊR - HÖHE

42 mm

MATERIALE - MATERIAL - MATIÈRE - MATERIAL

Zama - Zamak - Zamac - Zamak.

FINITURE - FINISHES - EXECUTIONS - AUSFUEHAUNGEN

grezzo - unfinished - brut - roh

MANART srl - 23876 MONTICELLO - FRAZ. CORTENUOVA (LC) ITALY - Via T. Moneta, 17 - Tel. 039.920.35.55 - 039.920.26.44 - Fax 039.920.28.01
www.manart.it e-mail: manart@manart.it

ART. 148

ALTEZZA - HEIGHT - HAUTÊR - HÖHE

100 mm.

FISSAGGIO - FIXING - FIXAGE - FIXIERUNG

Piastra 75x50 mm. - Plate 75x50 mm. - Plaque 75x50 mm. - Platte 75x50 mm.

MATERIALE - MATERIAL - MATIÈRE - MATERIAL

Zama 50x17 mm - Zamak 50x17 mm - Zamac 50x17 mm - Zamak 50x17 mm.

REGOLAZIONE - ADJUSTEMENT - REGLAGE - REGULIERUNG

Esterna con regolazione. - Outside with regulation.Extérieur avec regulation. - Aesser mit Einstellung.

FINITURE - FINISHES - EXECUTIONS - AUSFUEHAUNGEN

Verniciatura epossidica: Alluminio - Cromato. - Epoxy painting: Aluminium - Chromed. - Peinture Epoxide: Aluminium - Chrome. - Epoxy Lackierung: Aluminium - Verchromt.

ART. 149

ALTEZZA - HEIGHT - HAUTÊR - HÖHE

100 - 140 - 200 mm.

FISSAGGIO - FIXING - FIXAGE - FIXIERUNG

Piastra 70x50 mm. - Plate 70x50 mm. - Plaque 70x50 mm. - Platte 70x50 mm.

MATERIALE - MATERIAL - MATIÈRE - MATERIAL

Zama 50x7 mm - Zamak 50x7 mm - Zamac 50x7 mm - Zamak 50x7 mm.

REGOLAZIONE - ADJUSTEMENT - REGLAGE - REGULIERUNG

Esterna con regolabile. - Outside with regulation - Extérieur avec regulation. - Aesser mit Einstellung.

FINITURE - FINISHES - EXECUTIONS - AUSFUEHAUNGEN

Verniciatura epossidica: Alluminio - Cromato. - Epoxy painting: Aluminium - Chromed. - Peinture Epoxide: Aluminium - Chrome. - Epoxy Lackierung: Aluminium - Verchromt.

ART. 150

ALTEZZA - HEIGHT - HAUTÊR - HÖHE

100 - 120 - 140 mm.

FISSAGGIO - FIXING - FIXAGE - FIXIERUNG

Vite 10MA - Screw 10MA - Vis 10MA - Schraube 10MA.

MATERIALE - MATERIAL - MATIÈRE - MATERIAL

Zama Ø 40 mm - Zamak Ø 40 mm - Zamac Ø 40 mm - Zamak Ø 40 mm.

REGOLAZIONE - ADJUSTEMENT - REGLAGE - REGULIERUNG

Esterna con regolazione. - Outside with regulation - Extérieur avec regulation. - Aesser mit Einstellung.

FINITURE - FINISHES - EXECUTIONS - AUSFUEHAUNGEN

Verniciatura epossidica: Alluminio. - Epoxy painting: Aluminium.
Peinture Epoxide: Aluminium. - Epoxy Lackierung: Aluminium.

ART. 151

ALTEZZA - HEIGHT - HAUTÊR - HÖHE

100 - 120 - 140 mm.

FISSAGGIO - FIXING - FIXAGE - FIXIERUNG

Piastra rotonda Ø 80 mm. - Round plate Ø 80 mm. - Plaque ronde Ø 80 mm. - Roundplatte Ø 80 mm.

MATERIALE - MATERIAL - MATIÈRE - MATERIAL

Zama Ø 40 mm - Zamak Ø 40 mm - Zamac Ø 40 mm - Zamak Ø 40 mm.

REGOLAZIONE - ADJUSTEMENT - REGLAGE - REGULIERUNG

Esterna con regolabile. - Outside with regulation. - Extérieur avec regulation. - Aesser mit Einstellung.

FINITURE - FINISHES - EXECUTIONS - AUSFUEHAUNGEN

Verniciatura epossidica: Alluminio. - Epoxy painting: Aluminium.
Peinture Epoxide: Aluminium. - Epoxy Lackierung: Aluminium.

ART. 152

ALTEZZA - HEIGHT - HAUTÊR - HÖHE

90 - 120 - 140 - 200 mm.

FISSAGGIO - FIXING - FIXAGE - FIXIERUNG

Piastra 90x90 mm. - Plate 90x90mm. - Plaque 90x90 mm. - Platte 90x90 mm.

MATERIALE - MATERIAL - MATIÈRE - MATERIAL

Zama Ø 18 mm - Zamak Ø 18 mm - Zamac Ø 18 mm - Zamak Ø 18 mm.

REGOLAZIONE - ADJUSTEMENT - REGLAGE - REGULIERUNG

Esterna con regolabile. - Outside with regulation. - Extérieur avec regulation. - Aesser mit Einstellung.

FINITURE - FINISHES - EXECUTIONS - AUSFUEHAUNGEN

Verniciatura epossidica: Alluminio. - Epoxy painting: Aluminium.
Peinture Epoxide: Aluminium. - Epoxy Lackierung: Aluminium.

ART. 153

ALTEZZA - HEIGHT - HAUTÊR - HÖHE

90 - 120 - 140 - 200 mm.

FISSAGGIO - FIXING - FIXAGE - FIXIERUNG

Piastra 90x90 mm. - Plate 90x90mm. - Plaque 90x90 mm. - Platte 90x90 mm.

MATERIALE - MATERIAL - MATIÈRE - MATERIAL

Zama 22x22 mm - Zamak 22x22 mm - Zamac 22x22 mm - Zamak 22x22 mm.

REGOLAZIONE - ADJUSTEMENT - REGLAGE - REGULIERUNG

Esterna con regolabile. - Outside with regulation. - Extérieur avec regulation. - Aesser mit Einstellung.

FINITURE - FINISHES - EXECUTIONS - AUSFUEHAUNGEN

Verniciatura epossidica: Alluminio - Nickel satinato - Cromato.
Epoxy painting: Aluminium - Nickel satined - Chromed.
Peinture Epoxide: Aluminium - Nickel satiné - Chrome.
Epoxy Lackierung: Aluminium - Nickel satiniert - Verchromt.

MANART srl - 23876 MONTICELLO - FRAZ. CORTENUOVA (LC) ITALY - Via T. Moneta, 17 - Tel. 039.920.35.55 - 039.920.26.44 - Fax 039.920.28.01
www.manart.it e-mail: manart@manart.it

ART. 154

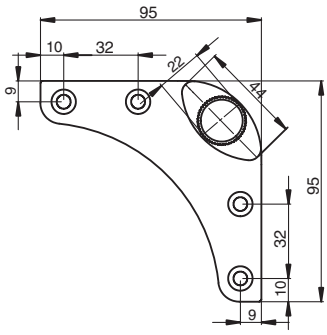

ALTEZZA - HEIGHT - HAUTÊR - HÖHE

100 - 120 - 140 - 200 mm.

FISSAGGIO - FIXING - FIXAGE - FIXIERUNG

Piastra 95x95 mm - Plate 95x95 mm.
Plaque 95x95 mm - Platte 95x95 mm.

MATERIALE - MATERIAL - MATIÈRE - MATERIAL

Zama - Zamak - Zamac - Zamak.

REGOLAZIONE - ADJUSTEMENT - REGLAGE - REGULIERUNG

Esterna con regolabile. - Outside with regulation.
Extérieur avec regulation. - Aesser mit Einstellung.

FINITURE - FINISHES - EXECUTIONS - AUSFUEHAUNGEN

Verniciatura epossidica: alluminio - cromato.
Epoxy painting: aluminium - chromed.
Peinture Epoxide: aluminium - chrome.
Epoxy Lackierung: Aluminium - Verchromt.

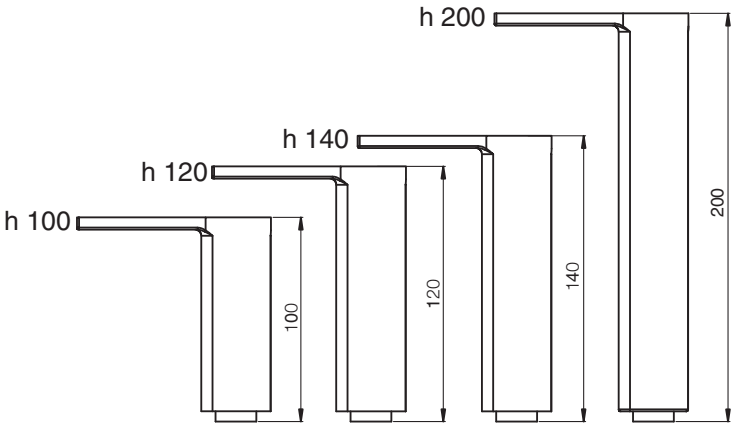

ART. 155

Piedino di regolazione h 20
(gambo oscillante)
Adjustment feet h 20
(swinging stem)

ALTEZZA - HEIGHT - HAUTÊR - HÖHE

16 mm.

MATERIALE - MATERIAL - MATIÈRE - MATERIAL

Zama - Zamak - Zamac - Zamak.

REGOLAZIONE - ADJUSTEMENT - REGLAGE - REGULIERUNG

Esterna con regolazione. - Outside with regulation.
Extérieur avec regulation. - Aesser mit Einstellung.

FINITURE - FINISHES - EXECUTIONS - AUSFUEHAUNGEN

Verniciatura epossidica: alluminio - cromato, altre a richiesta.
Epoxy painting: aluminium - chromed, other on demand.
Peinture Epoxide: aluminium - chrome, autres sur demande.
Epoxy Lackierung: Aluminium - Verchromt, andere auf Anfrage.

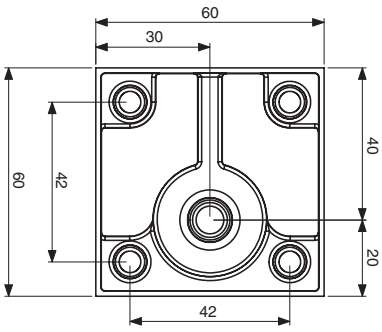

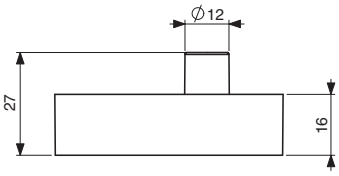

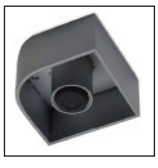

ART. 156

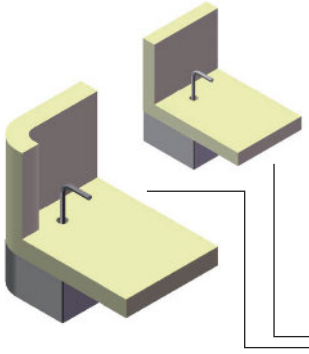

Chiave a brugola da 4 mm
4 mm allen key slot

Piedino di regolazione h 20
(gambo oscillante)
Adjustment feet h 20
(swinging stem)

ALTEZZA - HEIGHT - HAUTÊR - HÖHE

40 mm.

MATERIALE - MATERIAL - MATIÈRE - MATERIAL

Zama - Zamak - Zamac - Zamak.

REGOLAZIONE - ADJUSTEMENT - REGLAGE - REGULIERUNG

Esterna con regolazione. - Outside with regulation.
Extérieur avec regulation. - Aesser mit Einstellung.

FINITURE - FINISHES - EXECUTIONS - AUSFUEHAUNGEN

Verniciatura epossidica: alluminio - cromato, altre a richiesta.
Epoxy painting: aluminium - chromed, other on demand.
Peinture Epoxide: aluminium - chrome, autres sur demande.
Epoxy Lackierung: Aluminium - Verchromt, andere auf Anfrage.

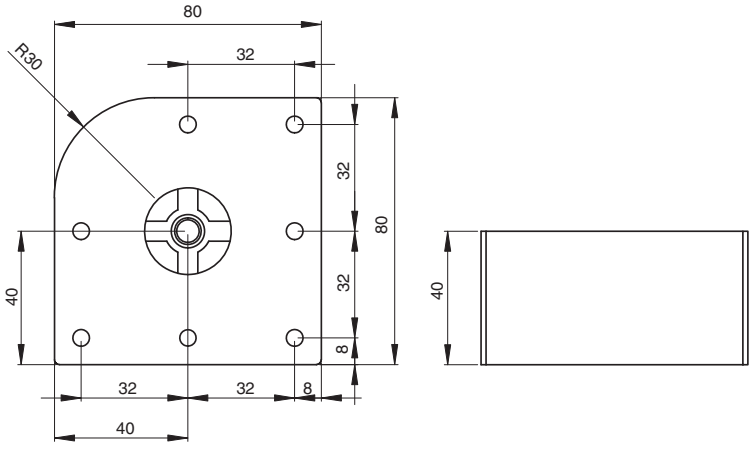

ART. 157

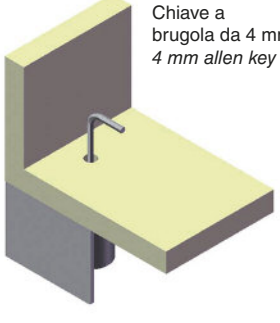

Chiave a
brugola da 4 mm
4 mm allen key slot

Piedino di regolazione h 20
(gambo oscillante)
Adjustment feet h 20
(swinging stem)

ALTEZZA - HEIGHT - HAUTÊR - HÖHE

60 mm.

MATERIALE - MATERIAL - MATIÈRE - MATERIAL

Zama - Zamak - Zamac - Zamak.

REGOLAZIONE - ADJUSTEMENT - REGLAGE - REGULIERUNG

Esterna con regolazione. - Outside with regulation.
Extérieur avec regulation. - Aesser mit Einstellung.

FINITURE - FINISHES - EXECUTIONS - AUSFUEHAUNGEN

Verniciatura epossidica: alluminio - cromato, altre a richiesta.
Epoxy painting: aluminium - chromed, other on demand.
Peinture Epoxide: aluminium - chrome, autres sur demande.
Epoxy Lackierung: Aluminium - Verchromt, andere auf Anfrage.

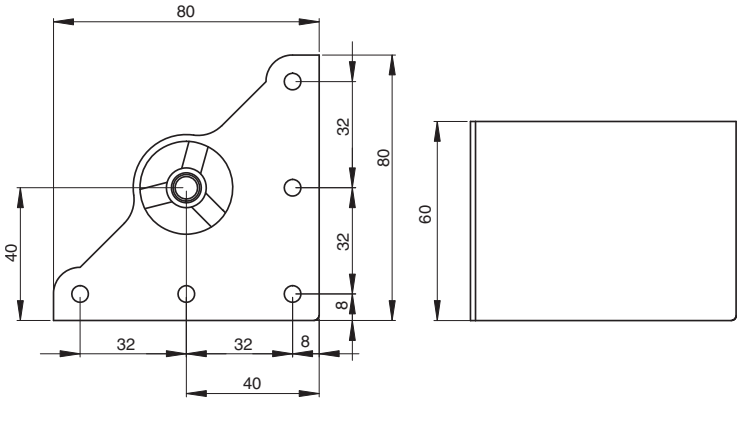

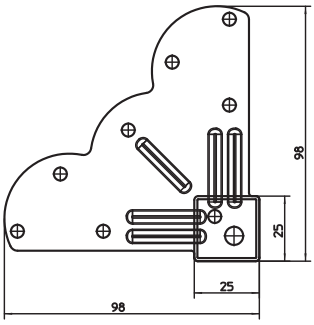

ART. 158

ALTEZZA - HEIGHT - HAUTÊR - HÖHE

100 - 120 - 150 - 200 - 250 - 300 mm.

FISSAGGIO - FIXING - FIXAGE - FIXIERUNG

Piastra triangolare 98x98x128 mm. - saldata.
Triangular plate 98x98x128 mm. - welded.
Plaque triangulaire 98x98x128 mm. - soudée.
Dreieckige Platte 98x98x128 mm. - geschweisst.

MATERIALE - MATERIAL - MATIÈRE - MATERIAL

Tubo 25x25 mm in acciaio.
Steel tube 25x25 mm.
Tube 25x25 mm en acier.
Stahlrohr 25x25 mm.

REGOLAZIONE - ADJUSTEMENT - REGLAGE - REGULIERUNG

Esterna con regolabile.
Outside with regulation.
Extérieur avec regulation.
Aeusser mit Einstellung.

FINITURE - FINISHES - EXECUTIONS - AUSFUEHAUNGEN

Verniciatura epossidica tutti i colori.
Ottonato - Nickel satinato - Alluminio - Cromato.
Epoxy painting every colour.
Brassed - Nickel satined - Aluminium - Chromed.
Peinture Epoxide chaque couleur.
Laitonné - Nickel satiné - Aluminium - Chrome.
Epoxy Lackierung jeder Farbe.
Vermessingt - Nickel satiniert - Aluminium - Verchromt.

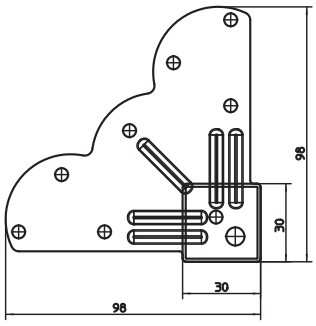

ART. 159

ALTEZZA - HEIGHT - HAUTÊR - HÖHE

100 - 120 - 150 - 200 - 250 - 300 mm.

FISSAGGIO - FIXING - FIXAGE - FIXIERUNG

Piastra triangolare 98x98x128 mm. - saldata.
Triangular plate 98x98x128 mm. - welded.
Plaque triangulaire 98x98x128 mm. - soudée.
Dreieckige Platte 98x98x128 mm. - geschweisst.

MATERIALE - MATERIAL - MATIÈRE - MATERIAL

Tubo 30x30 mm in acciaio.
Steel tube 30x30 mm.
Tube 30x30 mm en acier.
Stahlrohr 30x30 mm.

REGOLAZIONE - ADJUSTEMENT - REGLAGE - REGULIERUNG

Esterna con regolabile.
Outside with regulation.
Extérieur avec regulation.
Aeusser mit Einstellung.

FINITURE - FINISHES - EXECUTIONS - AUSFUEHAUNGEN

Verniciatura epossidica tutti i colori.
Ottonato - Nickel satinato - Alluminio - Cromato.
Epoxy painting every colour.
Brassed - Nickel satined - Aluminium - Chromed.
Peinture Epoxide chaque couleur.
Laitonné - Nickel satiné - Aluminium - Chrome.
Epoxy Lackierung jeder Farbe.
Vermessingt - Nickel satiniert - Aluminium - Verchromt.

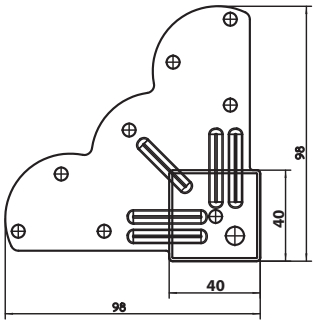

ART. 160

ALTEZZA - HEIGHT - HAUTÊR - HÖHE

100 - 120 - 150 - 200 - 250 - 300 mm.

FISSAGGIO - FIXING - FIXAGE - FIXIERUNG

Piastra triangolare 98x98x128 mm. - saldata.
Triangular plate 98x98x128 mm. - welded.
Plaque triangulaire 98x98x128 mm. - soudée.
Dreieckige Platte 98x98x128 mm. - geschweisst.

MATERIALE - MATERIAL - MATIÈRE - MATERIAL

Tubo 40x40 mm in acciaio.
Steel tube 40x40 mm.
Tube 40x40 mm en acier.
Stahlrohr 40x40 mm.

REGOLAZIONE - ADJUSTEMENT - REGLAGE - REGULIERUNG

Esterna con regolabile.
Outside with regulation.
Extérieur avec regulation.
Aeusser mit Einstellung.

FINITURE - FINISHES - EXECUTIONS - AUSFUEHAUNGEN

Verniciatura epossidica tutti i colori.
Ottonato - Nickel satinato - Alluminio - Cromato.
Epoxy painting every colour.
Brassed - Nickel satined - Aluminium - Chromed.
Peinture Epoxide chaque couleur.
Laitonné - Nickel satiné - Aluminium - Chrome.
Epoxy Lackierung jeder Farbe.
Vermessingt - Nickel satiniert - Aluminium - Verchromt.

MANART srl - 23876 MONTICELLO - FRAZ. CORTENUOVA (LC) ITALY - Via T. Moneta, 17 - Tel. 039.920.35.55 - 039.920.26.44 - Fax 039.920.28.01
www.manart.it e-mail: manart@manart.it

ART. 80 Ø 30

FISSAGGIO - FIXING - FIXAGE - FIXIERUNG

Vite 10MA
10MA screw
Vis 10MA
10MA Schraube

MATERIALE - MATERIAL - MATIÈRE - MATERIAL

Metallo ottonato o cromato
Brass-plated or chrome-plated metal
Métal cuivré ou chromé
Vermessingt oder Verchromt Metall

ART. 81 Ø 30 - Ø 35

FISSAGGIO - FIXING - FIXAGE - FIXIERUNG

Vite 8MA - 10MA con dado
8MA - 10MA screw
8MA - Vis 10MA
8MA - 10MA Schraube

MATERIALE - MATERIAL - MATIÈRE - MATERIAL

Metallo ottonato o nichelato
Brass-plated or Nickel plated metal
Métal cuivré ou Nickélé
Vermessingt oder Vernieckelt Metall

ART. 90

MATERIALE - MATERIAL - MATIÈRE - MATERIAL

Tappo in gomma 25x25 mm - Filetto 10MA
Rubber plug size 25x25 mm - 10MA screws
Bouchon en caouchouc taille 25x25 mm - Vis 10MA
Gummipfropfen - Mass 25x25 mm - 10MA Schrauben

ART. 91

MATERIALE - MATERIAL - MATIÈRE - MATERIAL

Tappo in gomma 25x25 mm
Rubber plug size 25x25 mm
Bouchon en caouchouc taille 25x25 mm
Gummipfropfen - Mass 25x25 mm

ART. 92

MATERIALE - MATERIAL - MATIÈRE - MATERIAL

Tappo in zama 25x25 mm - Filetto 10MA
Zamak plug size 25x25 mm - 10MA screws
Bouchon en zama taille 25x25 mm - Vis 10MA
Pfropfen aus Zama Mass 25x25 mm - 10MA Schrauben

ART. 200

FISSAGGIO - FIXING - FIXAGE - FIXIERUNG

Piastra triangolare con rialzo filetto 10 MA - 90x90x125 mm
Triangular plate with rise 10 MA screws - 90x90x125 mm
Plaque triangulaire avec hauter vis 10 MA - 90x90x125 mm
Dreieckige Platte mit Erhoehung 10 M Schrauben - 90x90x125 mm

MATERIALE - MATERIAL - MATIÈRE - MATERIAL

Metallo zincato
Zinc-coated metal
Metal zingué
Vernieckelt Metall

ART. 101

ALTEZZA - HEIGHT - HAUTÊR - HÖHE

100 - 120 - 150 - 200 mm.

FISSAGGIO - FIXING - FIXAGE - FIXIERUNG

Vite 10 MA x 30 mm.
Screw 10 MA x 30 mm.
Vis 10 MA x 30 mm.
Schraube 10 MA x 30 mm.

MATERIALE - MATERIAL - MATIÉRE - MATERIAL

Legno Ø 38 mm.
Wood Ø 38 mm.
Bois Ø 38 mm.
Holz Ø 38 mm.

FINITURE - FINISHES - EXECUTION - AUSFUEHRUNGEN

Naturale - Noce - Laccato bianco.
Natural wood - Walnut - Lacquered white.
Bois natural - Noyer - Laqué blanc.
Natürliche Holz - Nußbaum - Weiß Lackiert.

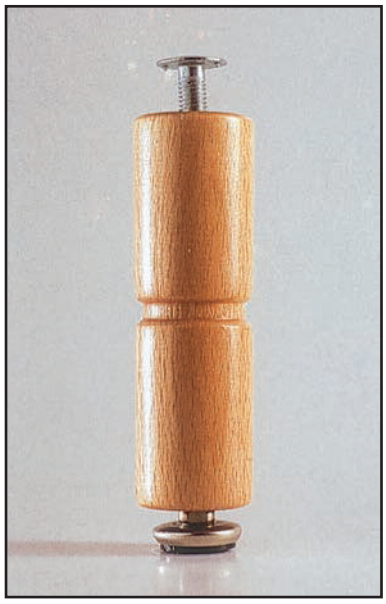

ART. 102

ALTEZZA - HEIGHT - HAUTÊR - HÖHE

100 - 120 - 150 - 200 mm.

FISSAGGIO - FIXING - FIXAGE - FIXIERUNG

Vite 10 MA x 30 mm.
Screw 10 MA x 30 mm.
Vis 10 MA x 30 mm.
Schraube 10 MA x 30 mm.

MATERIALE - MATERIAL - MATIÉRE - MATERIAL

Legno Ø 45 mm.
Wood Ø 45 mm.
Bois Ø 45 mm.
Holz Ø 45 mm.

FINITURE - FINISHES - EXECUTION - AUSFUEHRUNGEN

Naturale - Noce - Laccato bianco.
Natural wood - Walnut - Lacquered white.
Bois natural - Noyer - Laqué blanc.
Natürliche Holz - Nußbaum - Weiß Lackiert.

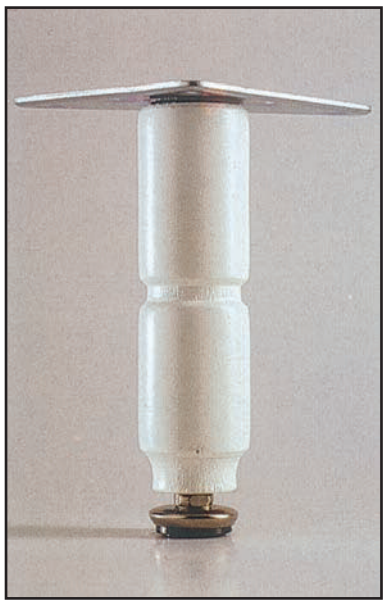

ART. 103

ALTEZZA - HEIGHT - HAUTÊR - HÖHE

100 - 120 - 150 - 200 mm.

FISSAGGIO - FIXING - FIXAGE - FIXIERUNG

Piastra svitabile
Unscrewing plate.
Plaque devissable.
Ausscraubbare Platte.

MATERIALE - MATERIAL - MATIÉRE - MATERIAL

Legno Ø 38 mm.
Wood Ø 38 mm.
Bois Ø 38 mm.
Holz Ø 38 mm.

FINITURE - FINISHES - EXECUTION - AUSFUEHRUNGEN

Naturale - Noce - Laccato bianco.
Natural wood - Walnut - Lacquered white.
Bois natural - Noyer - Laqué blanc.
Natürliche Holz - Nußbaum - Weiß Lackiert.

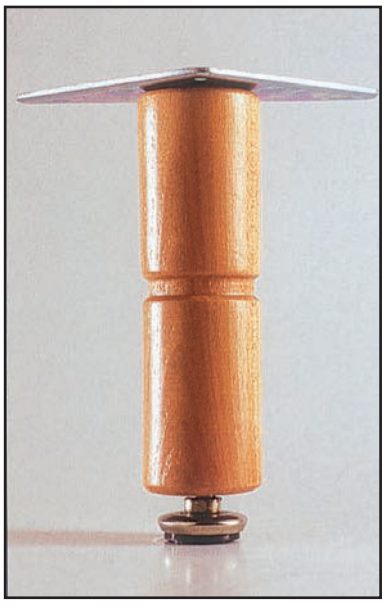

ART. 104

ALTEZZA - HEIGHT - HAUTER - HÖHE

100 - 120 - 150 - 200 mm.

FISSAGGIO - FIXING - FIXAGE - FIXIERUNG

Piastra svitabile.
Unscrewing plate.
Plaque devissable.
Ausschraubbare Platte.

MATERIALE - MATERIAL - MATIÉRE - MATERIAL

Legno Ø 45 mm.
Wood Ø 45 mm.
Bois Ø 45 mm.
Holz Ø 45 mm.

FINITURE - FINISHES - EXECUTION - AUSFUEHRUNGEN

Naturale - Noce - Laccato bianco.
Natural wood - Walnut - Lacquered white.
Bois natural - Noyer - Laqué blanc.
Natürliche Holz - Nußbaum Weiß Lackiert.

ART. 49

ALTEZZA - HEIGHT - HAUTER - HÖHE

74 cm.

FISSAGGIO - FIXING - FIXAGE - FIXIERUNG

Con perni a distanza regolabile - spacco standard 12 cm.
With pins at adjustable distance - standard cutting 12 cm.
Avec pivots à distance reglable - fente standard 12 cm.
Sifte mit einstellbarem Abstand - Riss standard von 12 cm.

MATERIALE - MATERIAL - MATIÉRE - MATERIAL

Legno Ø 53 o 63 mm.
Wood Ø 53 o 63 mm.
Bois Ø 53 o 63 mm.
Holz Ø 53 o 63 mm.

FINITURE - FINISHES - EXECUTION - AUSFUEHRUNGEN

Naturale - Noce - Laccato bianco - Rovere.
Natural wood - Walnut - Lacquered white - oak.
Bois natural - Noyer - Laqué blanc - chéne.
Natürliche Holz - Nußbaum Weiß Lackiert - Eiche.

MANART

23876 MONTICELLO - Fraz. Cortenuova (LC) ITALY
Via T. Moneta, 17 - Tel. 039.920.35.55 - 039.920.26.44
Fax 039.920.28.01 - e-mail: manart@manart.it
www.manart.it

2 gambe
fusti e giunzioni per tavoli passacavi

ART. 20

GAMBA PER TAVOLI ALLUNGABILE
EXTENSIBLE TABLE LEG
PIED DE TABLE EXTENSIBLE
VERLAENGERBAR TISCHBEIN

ALTEZZA - HEIGHT - HAUTÊR - HÖHE

Standard cm. 71 chiusa, allungabile fino a 110 cm.
Standard size 71 cm. extensible to 110 cm.
Standard taille cm. 71 en position fermée alongeable jusqu'à 110 cm.
Standard Mass cm. 71, geschlossen, ausziehbar bis zu 110 cm.

FISSAGGIO - FIXING - FIXAGE - FIXIERUNG

Piastra alluminio, smontabile.
Aluminium plate, detachable.
Aluminium plaque, demontable.
Aluminium Platte, Zerlegbares.

MATERIALE - MATERIAL - MATIÉRE - MATERIAL

Tubo Ø 60 mm. in acciaio.
Steel tube Ø 60 mm.
Tube Ø 60 mm. en acier.
Stahlrohr Ø 60 mm.

FINITURE - FINISHES - EXECUTIONS - AUSFUEHRUNGEN

Veniciatura epossidica tutti i colori.
Ottonato - Nickel satinato
Alluminio - Cromato.
Epoxy painting every colour.
Brassed - Nickel satined
Aluminium - Chromed.
Peinture Epoxide chaque couleur.
Laitonné - Nickel satiné
Aluminium - Chrome.
Epoxy Lackierung jeder Farbe.
Vermessingt - Nickel satiniert
Aluminium - Verchromt.

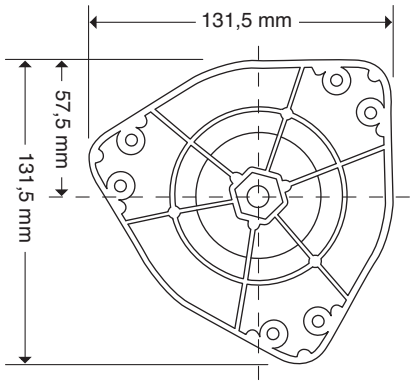

ART. 21 R

GAMBA PER TAVOLI CONIFICATA
CONICAL TABLE LEG
PIED DE TABLE CONIQUE
KONISCHE TISCHBEIN

ALTEZZA - HEIGHT - HAUTÊR - HÖHE

Standard 71 cm. Terminale regolabile max 1 cm.
Standard size 71 cm. Adjustable leg max 1 cm.
Standard taille 71 cm. Pied reglable max 1 cm.
Standard Mass 71 cm. Verstellbaresbein max 1 cm.

FISSAGGIO - FIXING - FIXAGE - FIXIERUNG

Piastra alluminio, smontabile.
Aluminium plate, detachable.
Aluminium plaque, demontable.
Aluminium Platte, Zerlegbares.

MATERIALE - MATERIAL - MATIÉRE - MATERIAL

Tubo Ø 60 mm. in acciaio.
Steel tube Ø 60 mm.
Tube Ø 60 mm. en acier.
Stahlrohr Ø 60 mm.

FINITURE - FINISHES - EXECUTIONS - AUSFUEHRUNGEN

Veniciatura epossidica tutti i colori.
Ottonato - Nickel satinato - Alluminio - Cromato.
Epoxy painting every colour.
Brassed - Nickel satined - Aluminium - Chromed.
Peinture Epoxide chaque couleur.
Laitonné - Nickel satiné - Aluminium - Chrome.
Epoxy Lackierung jeder Farbe.
Vermessingt - Nickel satiniert - Aluminium - Verchromt.

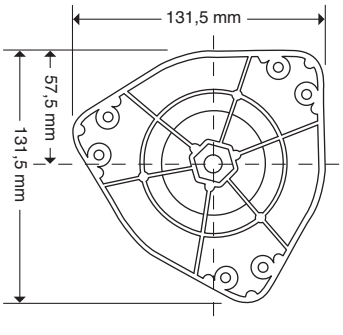

ART. 21 R

Terminale regolabile max 1 cm.
Adjustable leg max 1 cm.
Pied reglable max 1 cm.
Verstellbaresbein max 1 cm.

ART. 21 ROLLER

Gamba da tavolo con ruota piroettante dotata di freno
di bloccaggio sulla ruota e sull'asse piroettante.
Leg with turning castor with simultaneous brake
of blockade on the turning axis.
Pied avec virevolant route avec frein de blocage simultané
sur la route et sur l'axie virevolant.
Tischbeine drehbare Rolle, mit simultaner Blockierungsbremse
auf dem Rad und der drehbaren Achse.

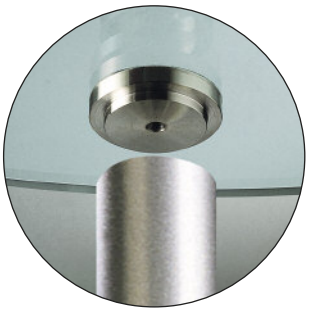

ART. 21 GLASS

FISSAGGIO - FIXING - FIXAGE - FIXIERUNG

Con piastra in acciaio inox per applicazione su vetro e cristallo.
With inox steel plate for application on glass and crystal.
Avec plaque en acier pour l'application sur verre et cristal.
Mit inox Sthalplatte fuer die Anwendung auf Glas und Kristall.

MANART srl - 23876 MONTICELLO - FRAZ. CORTENUOVA (LC) ITALY - Via T. Moneta, 17 - Tel. 039.920.35.55 - 039.920.26.44 - Fax 039.920.28.01
www.manart.it e-mail: manart@manart.it

ART. 23

GAMBA PER TAVOLI
TABLE LEG
PIED DE TABLE
TISCHBEIN

ALTEZZA - HEIGHT - HAUTÊR - HÖHE

Standard 71 cm. Disponibile a richiesta per quantità.
Standard size 71 cm. Available for quantities on request.
Standard taille 71 cm. Disponible sur demande pour quantitè.
Standard Mass 71 cm. Fuer Mengen auf Ersuchen verfuegbar.

FISSAGGIO - FIXING - FIXAGE - FIXIERUNG

Piastra alluminio 131.5 x 131.5 mm - smontabile.
Aluminium plate 131.5 x 131.5 mm - detachable.
Aluminium plaque 131.5 x 131.5 mm - demontable.
Aluminium Platte 131.5 x 131.5 mm - Zerlegbares.

MATERIALE - MATERIAL - MATIÉRE - MATERIAL

Tubo Ø 60 mm in acciaio.
Steel tube Ø 60 mm.
Tube Ø 60 mm en acier.
Stahlrohr Ø 60 mm.

FINITURE - FINISHES - EXECUTIONS - AUSFUEHRUNGEN

Veniciatura epossidica tutti i colori.
Ottonato - Nickel satinato - Alluminio - Cromato.
Epoxy painting every colour.
Brassed - Nickel satined - Aluminium - Chromed.
Peinture Epoxide chaque couleur.
Laitonné - Nickel satiné - Aluminium - Chrome.
Epoxy Lackierung jeder Farbe.
Vermessingt - Nickel satiniert - Aluminium - Verchromt.

ART. 23 F

Terminale fisso.
Fixed leg.
Pied fixe.
Festesbein.

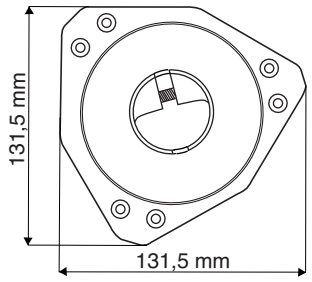

Piastra per gamba Ø 60 mm. - Plate for leg Ø 60 mm.
Plaque for pied de table Ø 60 mm. - Tischbeinplatte Ø 60 mm.

ART. 23 R

Terminale regolabile max 3 cm.
Adjustable leg max 3 cm.
Pied reglable max 3 cm.
Verstellbaresbein max 3 cm.

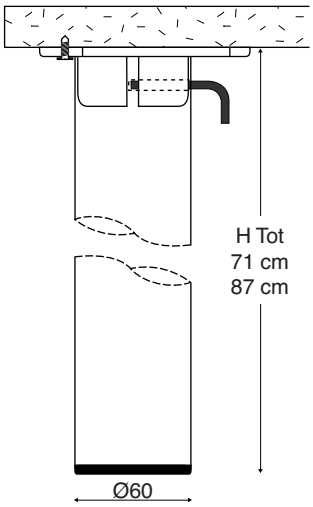

ART. 23 ROLLER

Gamba con ruota piroettante dotata di freno di bloccaggio sulla ruota e sull'asse piroettante.

Leg with turning castor with simultaneous brake of blockade on the turning axis.

Pied avec virevolant route avec frein de blocage simultané sur la route et sur l'axie virevolant.

Drehbare-rolle Tischbeine, mit simultaner Blockierungs bremse auf dem Rad und der drehbaren Achse.

ISTRUZIONI PER IL MONTAGGIO • *MOUNTING INSTRUCTIONS* • INSTRUCTIONS DE MONTAGE • *MONTAGEANWEISUNGEN*

Sistema di fissaggio a espansione rapido e sicuro, facile da montare, smontare e riporre in poco spazio.
Expansion system, quick and safe easy mounting and unscrewing space saving.
Systeme de fissage a expansion, vite et sur facile a monter et demonter, possibilite d'epargner d'espace.
Systeme auf Expansion, schnell und sicher einfach zu montieren und wieder zu iösen platzeinsparend.

1 POSIZIONARE LA PIASTRA SUL PIANO E FISSARLA CON LE APPOSITE VITI.

PUT THE PLATE ON THE TABLE AND FIX IT WITH THE AVAILABLE SCREWS.

POSITIONNER LA PLAQUE SUR LA TABLE ET VISSER LA MEME AVEC LES VIS SPECIALES.

POSITIONIEREN DIE BEFESTIGNGSPLATTE AUF DER TI-SCHPLATTE UND SCHRAUBEN MIT DEN SPEZIELL DAFÜR VORGESEHENEN SCHRAUBEN FEST.

2 INSERIRE LA GAMBA IN CORRISPONDENZA DEL FORO SULLA PIASTRA.

INSERT THE LEG IN CORRESPONDANCE WITH THE HOLE ON THE PLATE.

INTRODUIRE LE PIED EN CORRESPONDANCE AVEC LE TROU SUR LA PLAQUE.

STECKEN DIE TISCHBEIN NACH DEM LOCH ÜBER DIE PLATTE.

3 AVVITARE IL GRANO (VITE) NELLA PIASTRA FINO AL FISSAGGIO DELLA GAMBA.

TURN THE SCREW INTO THE PLATE UP TO FIX THE LEG.

TOURNER LA VIS DANS LA PLAQUE JUSQUE LA FIXAGE DE LE PIED.

DREHEN DIE SCHRAUBE IN DER PLATTE UM DIE BEINE ZU BEFESTIGEN.

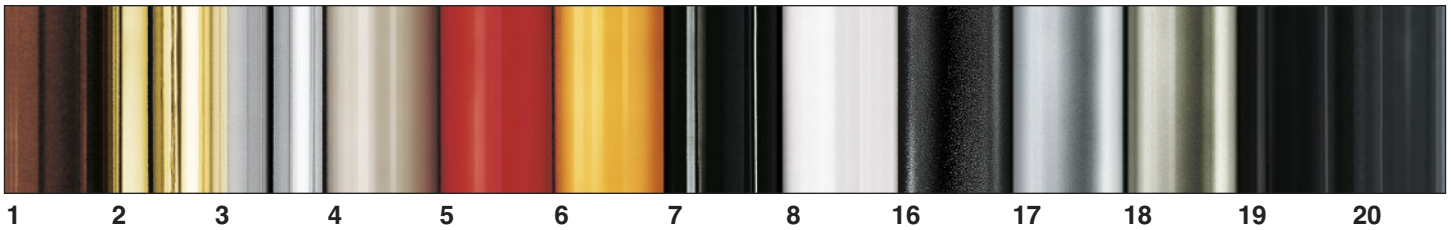

1	2	3	4	5	6	7	8	16	17	18	19	20
MARRONE BROWN MARRON BRAUN **RAL 8016**	OTTONATO BRASS PLATED LAITONNE VERMESSINGT	CROMATO CHROME PLATED CHROME VERCHROMT	GRIGIO GREY GRIS GRAU **RAL 7001**	ROSSO RED ROUGE ROT **RAL 3000**	GIALLO YELLOW JAUNE GELB	NERO LUCIDO GLOSSY BLACK NOIR BRILLANT SCHWARZ GLÄNZEND	BIANCO WHITE BLANC WEISS	NERO BUCCIATO ORANGE PEEL BLACK NOIR TEXTURÉ ORANGENSCHALE SCHWARZ	ALLUMINIO ALUMINIUM ALUMINIUM ALUMINIUM **RAL 9006**	NICKEL SATINATO NICKEL SATINED NICKEL SATINÉ NICKEL SATINIERT	NERO SEMIOPACO SEMI-OPAQUE BLACK NOIR SEMI-OPAQUE SCHWARZ HALBMATT	GRIGIO ANTRACITE ANTHRACITE GREY GRIS ANTHRACITE ANTHRAZITGRAU **RAL 7016**

21
ALLUMINIO **RAL 9006**
+ VERNICE TRASPARENTE
ALUMINIUM **RAL 9006**
+ TRANSPARENT ENAMEL
ALUMINIUM **RAL 9006**
+ PEINTURE TRANSPARENTE
ALUMINIUM **RAL 9006**
+ TRANSPARENTER LACK

22
ALLUMINIO BUCCIATO
RAL 9006
TEXTURED ALUMINIUM
RAL 9006
ALUMINIUM MOUCHETIS **RAL 9006**
ALUMINIUM **RAL 9006**
TUPFLACKIERT

23
METALLO GREZZO SATINATO
+ VERNICE TRASPARENTE
RAW SATINED METAL
+ TRANSPARENT ENAMEL
MÉTAL BRUT SATINÉ
+ PEINTURE TRANSPARENTE
ROHMETALL SATINIERT
+ TRANSPARENTER LACK

24
VERNICIATO TRASPARENTE
VARNISHED TRANSPARENT
VERNIS TRANSPARENT
TRANSPARENT LACKIERT

25
ACCIAIO INOX **AISI 304**
STAINLESS STEEL **AISI 304**
ACIER INOX **AISI 304**
EDELSTAHL **AISI 304**

26
ALLUMINIO RIGATO
RIDGED ALUMINIUM
ALUMINIUM DENTELÉ
ALUMINIUM GERIFFELT

CONFEZIONI STANDARD

cm. 71 4 PEZZI/*4 PCS./4 PIECES/4 STÜCK*
Ø 60 cm cm.101 x 26 x 7 Kg. 7

cm. 87 1 PEZZO/*1 PC./1 PIECE/1 STÜCK*
Ø 60 cm. cm.104 x 14 x 8 Kg. 2

MANART srl - 23876 MONTICELLO - FRAZ. CORTENUOVA (LC) ITALY - Via T. Moneta, 17 - Tel. 039.920.35.55 - 039.920.26.44 - Fax 039.920.28.01
www.manart.it e-mail: manart@manart.it

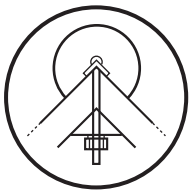

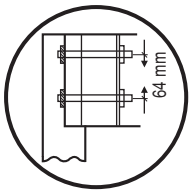

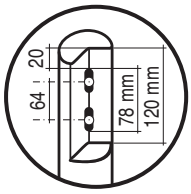

ART. 24

GAMBA PER TAVOLI
TABLE LEG
PIED DE TABLE
TISCHBEIN

ALTEZZA - HEIGHT - HAUTÊR - HÖHE

Standard 75 cm. Terminale fisso. Terminale regolabile disponibile su richiesta per quantità.
Standard size 75 cm. Fixed Leg. Adjustable terminal unit available upon request in quantity.
Standard taille 75 cm. Pied fixe. Embout terminal réglable sur demande et selon la quantité disponible.
Standard Mass 75 cm. Festes Bein. Einstellbares Endstück, lieferbar auf Anfrage nach Stückzahl.

FISSAGGIO - FIXING - FIXAGE - FIXIERUNG

Con perni regolabili (8MA x 90mm) - spacco standard 12 cm.
With adjustable pins (8MA x 90mm) - standard cutting 12 cm.
Avec pivots réglable (8MA x 90mm) - fente standard 12 cm.
Mit einstellbaren Stiften (8MA x 90mm) - Riss standard von 12 cm.

MATERIALE - MATERIAL - MATIÉRE - MATERIAL

Tubo Ø 50-60 mm in acciaio.
Steel tube Ø 50-60 mm.
Tube Ø 50-60 mm en acier.
Stahlrohr Ø 50-60 mm.

FINITURE - FINISHES - EXECUTIONS - AUSFUEHRUNGEN

Verniciatura epossidica tutti i colori.
Ottonato - Nickel satinato - Alluminio - Cromato.
Epoxy painting every colour.
Brassed - Nickel satined - Aluminium - Chromed.
Peinture Epoxide chaque couleur.
Laitonné - Nickel satiné - Aluminium - Chrome.
Epoxy Lackierung jeder Farbe.
Vermessingt - Nickel satiniert - Aluminium - Verchromt.

ART. 24 ROLLER

Gambe da tavolo con ruota piroettante dotata di freno di bloccaggio simultaneo sulla ruota e sull'asse piroettante.
Legs with turning castor with simultaneous brake of blockade on the turning axis.
Pied avec virevolant route, avec frein de bloccage simultané sur la route et sur l'axe virevolant.
Tischbeine mit drehbare Rolle, mit simultaner Blockierungsbremse auf dem Rad und der drehbaren Achse.

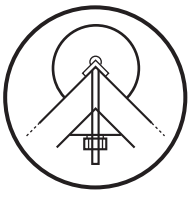

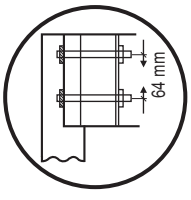

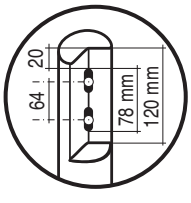

ART. 26

GAMBA PER TAVOLI CONIFICATA
CONICAL TABLE LEG
PIED DE TABLE CONIQUE
KONISCHE TISCHBEIN

ALTEZZA - HEIGHT - HAUTÊR - HÖHE

Standard 75 cm. Disponibile a richiesta per quantità.
Standard size 75 cm. Available for quantities on request.
Standard taille 75 cm. Disponible sur demande pour quantitè.
Standard Mass 75 cm. Fuer Mengen auf Ersuchen verfuegbar.

FISSAGGIO - FIXING - FIXAGE - FIXIERUNG

Con perni regolabili (8MA x 90mm) - spacco 12 cm standard.
With adjustable pins (8MA x 90mm) - cutting 12 cm standard.
Avec pivots réglable (8MA x 90mm) - fende 12 cm standard.
Mit einstellbaren Stiften (8MA x 90mm) - Riss von 12 cm standard.

MATERIALE - MATERIAL - MATIÉRE - MATERIAL

Tubo Ø 60 mm. in acciaio.
Steel tube Ø 60 mm.
Tube Ø 60 mm en acier.
Stahlrohr Ø 60 mm.

FINITURE - FINISHES - EXECUTIONS - AUSFUEHRUNGEN

Veniciatura epossidica tutti i colori.
Ottonato - Nickel satinato - Alluminio - Cromato.
Epoxy painting every colour.
Brassed - Nickel satined - Aluminium - Chromed.
Peinture Epoxide chaque couleur.
Laitonné - Nickel satiné - Aluminium - Chrome.
Epoxy Lackierung jeder Farbe.
Vermessingt - Nickel satiniert - Aluminium - Verchromt.

ART. 26 R

Terminale regolabile max 1 cm.
Adjustable leg max 1 cm.
Pied reglable max 1 cm.
Verstellbaresbein max 1 cm.

ART. 26 ROLLER

Gamba da tavolo con ruota piroettante dotata di freno
di bloccaggio sulla ruota e sull'asse piroettante.
Leg with turning castor with simultaneous brake
of blockade on the turning axis.
Pied avec virevolant route avec frein de blocage simultané
sur la route et sur l'axie virevolant.
Tischbeine drehbare Rolle, mit simultaner Blockierungsbremse
auf dem Rad und der drehbaren Achse.

MANART srl - 23876 MONTICELLO - FRAZ. CORTENUOVA (LC) ITALY - Via T. Moneta, 17 - Tel. 039.920.35.55 - 039.920.26.44 - Fax 039.920.28.01
www.manart.it e-mail: manart@manart.it

MANART

Art.25 Art.35

Gambe per tavoli Pieds pour table Table legs Tischbeine

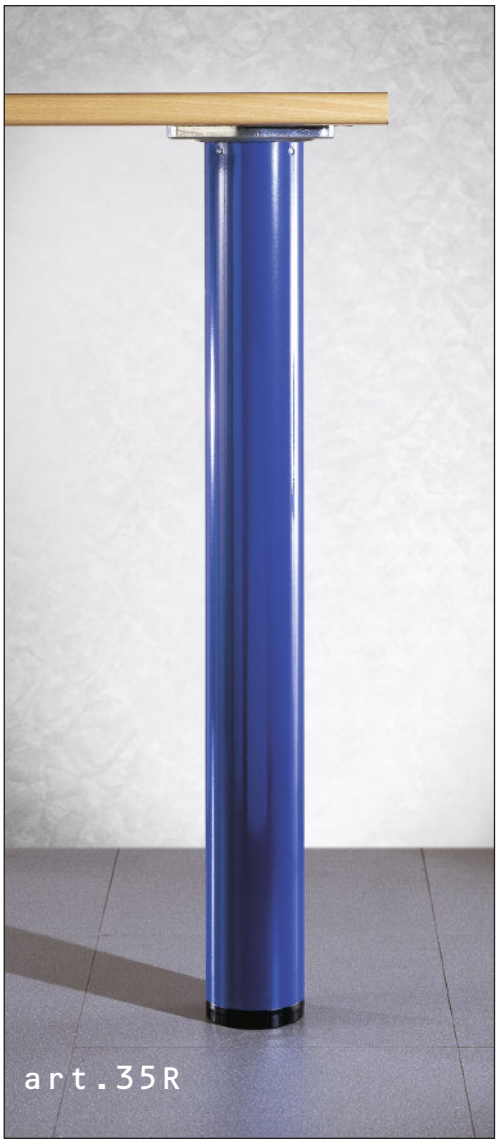

art.25R

h 71 cm	h 87 cm
ø 60 cm	ø 60 cm

art.35R

h 71 cm	h 87 cm
ø 80 cm	ø 80 cm

TERMINALE - TERMINAL PART - PARTIE TERMINALE - TERMINAL

F

TERMINALE FISSO
FIXED LEG
PIED FIXE
FESTES BEIN

R

TERMINALE REGOLABILE MAX 3 CM.
ADJUSTABLE LEG MAX 3 CM.
PIED REGLABLE MAX 3 CM.
VERSTELLBARES BEIN MAX 3 CM.

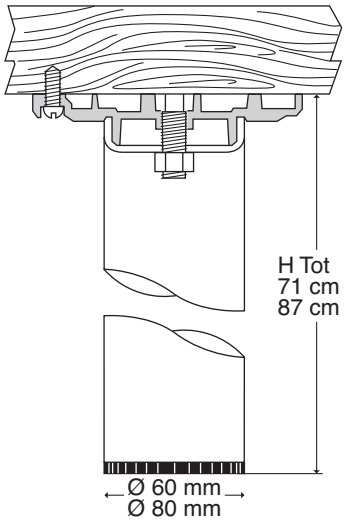

art.25R glass

h 71 cm	h 87 cm
ø 60 cm	ø 60 cm

art.35R glass

h 71 cm	h 87 cm
ø 80 cm	ø 80 cm

GAMBE CON SPECIALI PIASTRE IN ACCIAIO INOX PER APPLICAZIONE SU VETRO E CRISTALLO.

LEGS WITH SPECIAL PLATES MADE OF INOX STEEL
FOR THE APPLICATION ON GLASS AND CRYSTAL.

PIEDS AVEC SPÉCIALS PLAQUES EN ACIER INOX POUR L'APPLICATION SUR VERRE ET CRISTAL.

TISCHBEINE MIT EINER SPEZIELLEN PLATTE MACHT AUS INOX STHAL FUER DIE ANWENDUNG AUF GLAS UND KRISTALL.

ISTRUZIONI PER IL MONTAGGIO – MOUNTING INSTRUCTIONS
INSTRUCTIONS DE MONTAGE – MONTAGEANWEISUNGEN

INSERIRE IL BULLONE A VITE NELLA PIASTRA.

INSERT THE BOLT IN THE MOUNTING PLATE.

INTRODUIRE LE BOULON DANS LA PLAQUE DE MONTAGE.

DEN SCHRAUBBOLZEN IN DIE BEFESTIGUNGSPLATTE EINFÜHREN.

POSIZIONARE LA PIASTRA SUL PIANO E FISSARLA CON LE APPOSITE VITI.

POSITION THE PLATE ON THE TABLE AND FASTEN WITH THE AVAILABLE SCREWS.

POSITIONNER LA PLAQUE SUR LA TABLE ET VISSER LA MEME AVEC LES VIS SPECIALES.

DIE BEFESTIGUNGSPLATTE AUF DER TISCHPLATTE POSITIONIEREN UND MIT DEN SPEZIELL DAFÜR VORGESEHENEN SCHRAUBEN FESTSCHRAUBEN.

AVVITARE LA GAMBA SUL BULLONE A VITE DELLA PIASTRA STRINGENDOLA BENE.

SCREW UP THE LEG ON THE BOLT OF THE MOUNTING PLATE.

VISSER ET SERRER LE PIED SUR LE BOULON DE LA PLAQUE DE MONTAGE.

DAS TISCHBEIN AUF DEN SCHRAUBBOLZEN DER BEFESTIGUNGSPLATTE FEST AUFSCHRAUBEN.

art.25 roller

h 71 cm	h 87 cm
ø 60 cm	ø 60 cm

art.35 roller

h 71 cm	h 87 cm
ø 80 cm	ø 80 cm

GAMBE CON RUOTA PIROETTANTE, DOTATA DI FRENO DI BLOCCAGGIO SIMULTANEO SULLA RUOTA E SULL' ASSE PIROETTANTE.

LEGS WITH TURNING CASTOR, WITH SIMULTANEOUS BRAKE OF BLOCKADE ON THE TURNING AXIS.

PIEDS AVEC VIREVOLANT ROUTE, AVEC FREIN DE BLOCCAGE SIMULTANÉ SUR LA ROUTE ET SUR L' AXE VIREVOLANT.

TISCHBEINE MIT DREHBARE ROLLE, MIT SIMULTANER BLOCKIERUNGS BREMSE AUF DEM RAD UND DER DREHBAREN ACHSE.

CONFEZIONI STANDARD DISPONIBILI, DIMENSIONI E PESI - STANDARD PACKING, AVAILABLE DIMENSIONS AND WEIGHTS-EMBALLAGES STANDARD DISPONIBLES, DIMENSIONS E POIDS - LIEFERBARE STANDARDABPACKUNGEN, MASSE UND GEWICHTE

art.25R

h 71 cm	**h 87 cm**
ø 60 cm	ø 60 cm
87 x 25,5 x 7	104 x 14 x 8
kg 7	kg 2
4 PEZZI	1 PEZZO
4 PCS.	1 PC.
4 PIECES	1 PIECE
4 STÜCK	1 STÜCK

art.35R

h 71 cm	**h 87 cm**
ø 80 cm	ø 80 cm
80 x 17 x 17	104 x 14 x 8,5
kg 9,5	kg 3
4 PEZZI	1 PEZZO
4 PCS.	1 PC.
4 PIECES	1 PIECE
4 STÜCK	1 STÜCK

DISPONIBILI IN DUE DIFFERENTI SOLUZIONI DI MONTAGGIO TRA PIASTRA E GAMBA DA SPECIFICARE NEGLI ORDINI DI ACQUISTO:

TABLE LEGS AVAILABLE IN TWO DIFFERENT FASTENING VERSIONS TO THE MOUNTING PLATE, PLEASE INDICATE IN THE ORDER:

PIÈTAMENTS POUR TABLES DISPONIBLES EN DEUX DIFFÉRENTES SYSTÈMES DE MONTAGE ENTRE PLAQUE ET PIÈTEMENT. PRIÈRE SPÉCIFIER LE SYSTÈME DEMANDÈ SUR VOTRE COMMANDE:

TISCHBEIN IN ZWEI VERSCHIEDENENEN AUSFÜHRUNGEN FÜR DIE MONTAGE AN DIE BEFESTIGUNGSPLATTE ERHÄLTLICH; BITTE IM AUFTRAG ANGEBEN:

SISTEMA DI FISSAGGIO A VITE RAPIDO E SICURO FACILE DA MONTARE, SMONTARE E RIPORRE IN POCO SPAZIO

FASTENING SYSTEM, QUICK AND SAFE EASY MOUNTING AND UNSCREWING SPACE SAVING.

SYSTEME DE FISSAGE A VIS, VITE ET SUR FACILE A MONTER ET DEMONTER, POSSIBILITE D'EPARGNER D'ESPACE.

ANSCHRAUBSYSTEM, SCHNELL UND SICHER EINFACH ZU MONTIEREN UND WIEDEN ZU LÖSEN PLATZEINSPAREND.

A

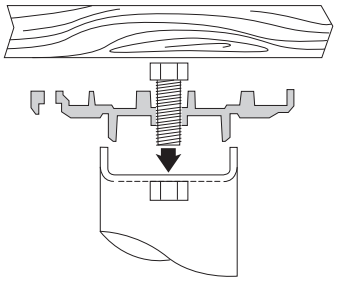

B

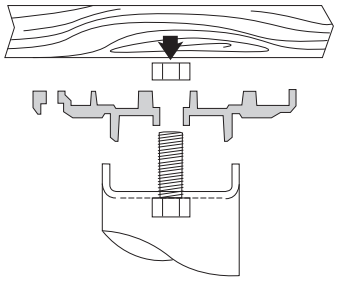

TIPO A: VITE 10MA X 30 MM DA INSERIRE NELLA PIASTRA E BULLONE 10MA SALDATO ALL3INTERNO DELLA GAMBA.

TYPE A: BOLT 10MA X 30 TO BE SCREWED IN THE MOUNTING PLATE, 10MA NUT IS WELDED INSIDE THE LEG.

TYPE A: BOULON 10M X 30 À VISSER DANS LA PLAQUE DE MONTAGE, L'ECROU 10M EST SOUDÉ DANS LE PIÉTEMENT.

TYP A: BOLZEN 10MA X 30 WIRD IN DIE BEFESTIGUNGSPLATTE EINGESCHRAUBT, 10MA MUTTER IM INNERN DES TISCHBEINS VERSCHWEISST.

TIPO B: BULLONE 10MA DA INSERIRE NELLA PIASTRA E VITE 10MA SALDATA ALL'INTERNO DELLA GAMBA.

TYPE B: MOUNTING PLATE IS SCREWED ON BOLT AND FIXED WITH NUT, 10MA BOLT IS WELDED INSIDE THE LEG.

TYPE B: PLAQUE DE MONTAGE VISSÉE AVEC BOULON 10M ET FIXÉE AVEC ÉCROU. LE BOULON 10M EST SOUDÉ DANS LE PIÉTEMENT.

TYP B: BEFESTIGUNGSPLATTE WIRD AUF 10MA BOLZEN DURCH MUTTER VERSCHRAUBT 10MA BOLZEN IM INNERN DES TISCHBEINS VERSCHWEISST

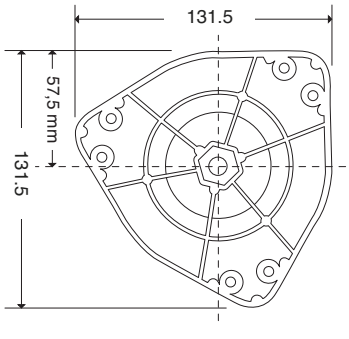

ART. 25 - ART. 35

GAMBE UTILIZZABILI PER SVARIATE SOLUZIONI DI ARREDAMENTO: TAVOLI PER CUCINA, SCRIVANIE, TAVOLI DA GIARDINO, PENISOLE PER CUCINE O MOBILI PER UFFICIO, TAVOLI SPECIALI PER PARTICOLARI ESIGENZE.

TABLE LEGS WITH A GOOD VERSATILITY FOR FURNITURE: KITCHEN-TABLES, DESKS, GARDEN-TABLES, PENINSULA LEG FOR KITCHENS OR OFFICE FURNITURE, SPECIAL TALBLES FOR SPECIAL REQUIREMENTS

PIEDS UTILISABLES POUR LES SOLUTIONS LES PLUS VARIEES DES MEUBLES: TABLES POUR LA CUISINE, BUREAUX, TABLES POUR JARDIN, PIETEMENTS POUR PENINSULES OU MEUBLES DE BUREAU, TABLES SPECIALES POUR DES EXIGENCES SPECIALES

TISCHBEINE FÜR DIE VERSCHIEDENSTEN EINRICHTUNGSLÖSUNGEN: KÜCHENTISCHE, SCHREIBTISCHE, GARTENTISCHE, HALBFÖRMIGE TISCHANSÄTZE FÜR KÜCKEN ODER BÜROMÖBEL, SPEZIELLE TISCHE FÜR BESONDERE ANFORDERUNGEN.

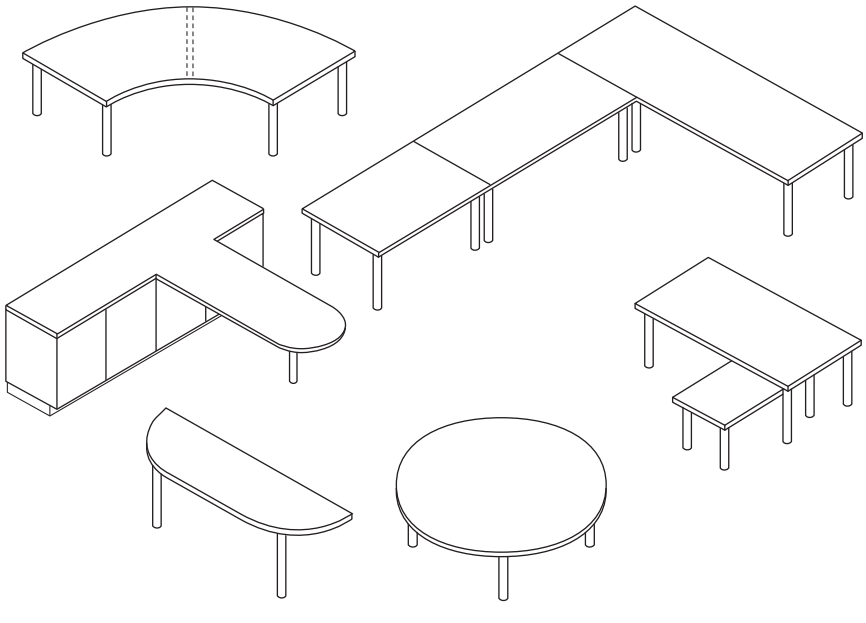

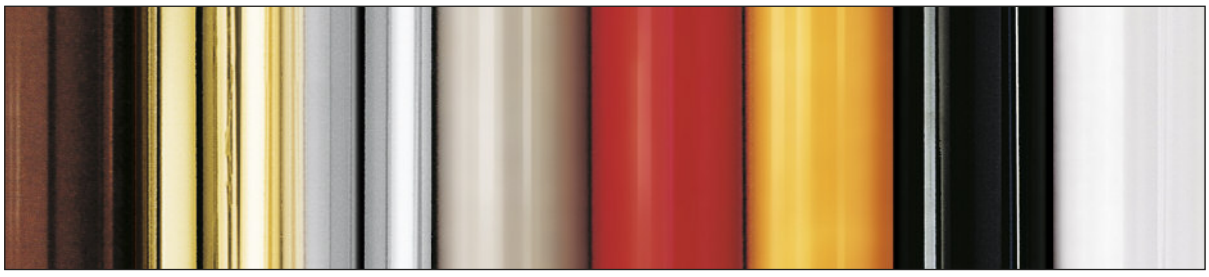

1
MARRONE
BROWN
MARRON
BRAUN
RAL 8016

2
OTTONATO
BRASS PLATED
LAITONNE
VERMESSINGT

3
CROMATO
CHROME PLATED
CHROME
VERCHROMT

4
GRIGIO
GREY
GRIS
GRAU
RAL 7001

5
ROSSO
RED
ROUGE
ROT
RAL 3000

6
GIALLO
YELLOW
JAUNE
GELB

7
NERO LUCIDO
GLOSSY BLACK
NOIR BRILLANT
SCHWARZ GLÄNZEND

8
BIANCO
WHITE
BLANC
WEISS

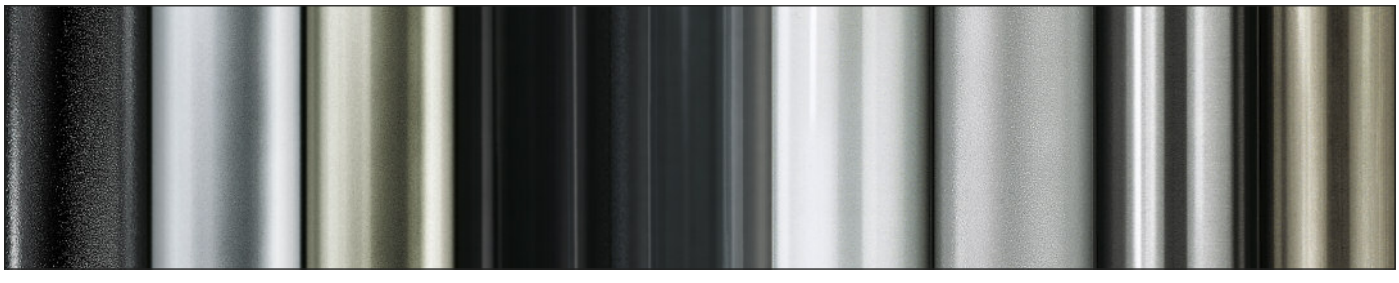

16
NERO BUCCIATO
ORANGE PEEL BLACK
NOIR TEXTURÉ
ORANGENSCHALE
SCHWARZ

17
ALLUMINIO
ALUMINIUM
ALUMINIUM
ALUMINIUM
RAL 9006

18
NICKEL SATINATO
NICKEL SATINED
NICKEL SATINÉ
NICKEL SATINIERT

19
NERO SEMIOPACO
SEMI-OPAQUE BLACK
NOIR SEMI-OPAQUE
SCHWARZ HALBMATT

20
GRIGIO ANTRACITE
ANTHRACITE GREY
GRIS ANTHRACITE
ANTHRAZITGRAU
RAL 7016

21
ALLUMINIO **RAL 9006**
+ VERNICE TRASPARENTE
ALUMINIUM **RAL 9006**
+ TRANSPARENT ENAMEL
ALUMINIUM **RAL 9006**
+ PEINTURE TRANSPARENTE
ALUMINIUM **RAL 9006**
+ TRANSPARENTER LACK

22
ALLUMINIO BUCCIATO
RAL 9006
TEXTURED ALUMINIUM
RAL 9006
ALUMINIUM MOUCHETIS
RAL 9006
ALUMINIUM **RAL 9006**
TUPFLACKIERT

23
METALLO GREZZO SATINATO
+ VERNICE TRASPARENTE
RAW SATINED METAL
+ TRANSPARENT ENAMEL
MÉTAL BRUT SATINÉ
+ PEINTURE TRANSPARENTE
ROHMETALL SATINIERT
+ TRANSPARENTER LACK

24
VERNICIATO TRASPARENTE
VARNISHED TRANSPARENT
VERNIS TRANSPARENT
TRANSPARENT LACKIERT

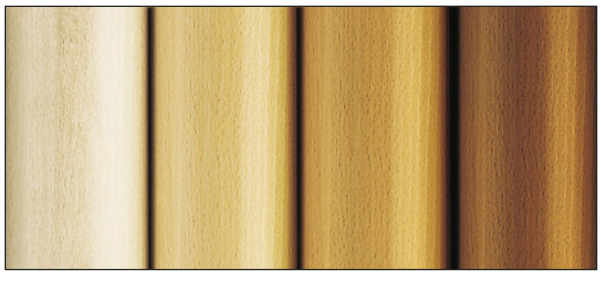

9 10 11 12
LEGNO MASSICCIO
SOLID WOOD
BOIS MASSIF
MASSIVE HOLZ

9
FAGGIO GREZZO
RAW BEECH
HÊTRE BRUT
BUCHE ROH

10
FAGGIO NATURALE
NATURAL BEECH
HÊTRE NATUREL
BUCHE NATUR

11
FAGGIO TINTO ROVERE
OAK STAINED BEECH
HÊTRE TEINTÉ CHÊNE
BUCHE EICHE GEFÄRBT

12
FAGGIO TINTO NOCE
WALNUT STAINED BEECH
HÊTRE TEINTÉ NOYER
BUCHE NUSS GEFÄRBT

13 14 15
METALLO RICOPERTO CON
LEGNO GREZZO
METAL COVERED WITH
WOOD
METAL COUVERT AVEC
BOIS BRUT
METALL BEDECKT MIT
UNBEHANDELTEN HOLZ

13
FRASSINO GREZZO
RAW ASH
FRÊNE BRUT
ESCHE ROH

14
ROVERE GREZZO
RAW OAK
ROUVRE BRUT
EICHE ROH

15
FAGGIO GREZZO
RAW BEECH
HÊTRE BRUT
BUCHE ROH

MONTICELLO

MANART s.r.l.

23876 MONTICELLO - FRAZ. CORTENUOVA (LC) ITALY
Via T. Moneta, 17 - Tel. 039.920.35.55 - 039.920.26.44
Fax 039.920.28.01 www.manart.it e-mail: manart@manart.it

Timbro del rivenditore - Dealer's stamp - Händlerstempel - Timbre du revendeur

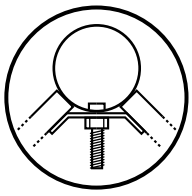

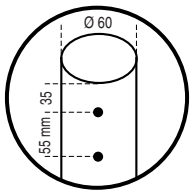

ART. 27

GAMBA PER TAVOLI Ø 60
TABLE LEG Ø 60
PIED DE TABLE Ø 60
TISCHBEIN Ø 60

ALTEZZA - HEIGHT - HAUTÊR - HÖHE

Standard 75 cm. Terminale fisso. Terminale regolabile disponibile su richiesta per quantità.
Standard size 75 cm. Fixed Leg. Adjustable terminal unit available upon request in quantity.
Standard taille 75 cm. Pied fixe. Embout terminal réglable sur demande et selon la quantité disponible.
Standard Mass 75 cm. Festes Bein. Einstellbares Endstück, lieferbar auf Anfrage nach Stückzahl.

FISSAGGIO - FIXING - FIXAGE - FIXIERUNG

Con perni a distanza fissa (8MA x 80mm).
With pins at fixed distance (8MA x 80mm).
Avec pivots à distance fixe (8MA x 80mm).
Mit fixiertem Abstandsstifte (8MA x 80mm).

MATERIALE - MATERIAL - MATIÉRE - MATERIAL

Tubo Ø 60 mm in acciaio.
Steel tube Ø 60 mm.
Tube Ø 60 mm en acier.
Stahlrohr Ø 60 mm.

FINITURE - FINISHES - EXECUTIONS - AUSFUEHRUNGEN

Verniciatura epossidica tutti i colori.
Ottonato - Nickel satinato - Alluminio - Cromato.
Epoxy painting every colour.
Brassed - Nickel satined - Aluminium - Chromed.
Peinture Epoxide chaque couleur.
Laitonné - Nickel satiné - Aluminium - Chrome.
Epoxy Lackierung jeder Farbe.
Vermessingt - Nickel satiniert - Aluminium - Verchromt.

ART. 27 ROLLER

Gambe da tavolo con ruota piroettante dotata di freno di bloccaggio simultaneo sulla ruota e sull'asse piroettante.
Legs with turning castor with simultaneous brake of blockade on the turning axis.
Pied avec virevolant route, avec frein de bloccage simultané sur la route et sur l'axe virevolant.
Tischbeine mit drehbare Rolle, mit simultaner Blockierungsbremse auf dem Rad und der drehbaren Achse.

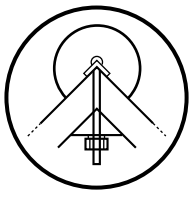

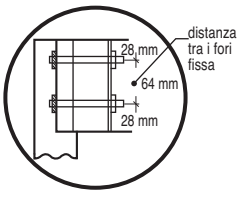

ART. PF

GAMBA PER TAVOLI CONIFICATA Ø 42
CONICAL TABLE LEG Ø 42
PIED DE TABLE CONIQUE Ø 42
KONISCHE TISCHBEIN Ø 42

ALTEZZA - HEIGHT - HAUTÊR - HÖHE

Standard 75 cm. Terminale regolabile.
Disponibile a richiesta per quantità.
Standard size 75 cm. Adjustable leg.
Available for quantities on request.
Standard taille 75 cm. Pied reglable.
Disponible sur demande pour quantitè.
Standard Mass 75 cm. Verstellbares Bein.
Fuer Mengen auf Ersuchen verfuegbar.

FISSAGGIO - FIXING - FIXAGE - FIXIERUNG

Con perni fissi (8MA x 80mm) - spacco standard 12 cm.
With fixed pins (8MA x 80mm) - standard cutting 12 cm.
Avec pivots fixés (8MA x 80mm) - fente standard 12 cm.
Mit befestigen Stiften (8MA x 80mm) - Riss standard von 12 cm.

MATERIALE - MATERIAL - MATIÉRE - MATERIAL

Tubo Ø 42 mm in acciaio. Steel tube Ø 42 mm.
Tube Ø 42 mm en acier. Stahlrohr Ø 42 mm.

FINITURE - FINISHES - EXECUTIONS - AUSFUEHRUNGEN

Veniciatura epossidica tutti i colori.
Ottonato - Nickel satinato - Alluminio - Cromato.
Epoxy painting every colour.
Brassed - Nickel satined - Aluminium - Chromed.
Peinture Epoxide chaque couleur.
Laitonné - Nickel satiné - Aluminium - Chrome.
Epoxy Lackierung jeder Farbe.
Vermessingt - Nickel satiniert - Aluminium - Verchromt.

ART. PS

GAMBA PER TAVOLI CONIFICATA Ø 42
CONICAL TABLE LEG Ø 42
PIED DE TABLE CONIQUE Ø 42
KONISCHE TISCHBEIN Ø 42

ALTEZZA - HEIGHT - HAUTÊR - HÖHE

Standard 75 cm. Terminale regolabile.
Disponibile a richiesta per quantità.
Standard size 75 cm. Adjustable leg.
Available for quantities on request.
Standard taille 75 cm. Pied reglable.
Disponible sur demande pour quantitè.
Standard Mass 75 cm. Verstellbares Bein.
Fuer Mengen auf Ersuchen verfuegbar.

FISSAGGIO - FIXING - FIXAGE - FIXIERUNG

Piastra triangolare 122x122x122 mm. - saldata.
Triangular plate 122x122x122 mm. - welded.
Plaque triangulaire 122x122x122 mm. - soudée.
Dreieckige Platte 122x122x122 mm. - geschweisst.

MATERIALE - MATERIAL - MATIÉRE - MATERIAL

Tubo Ø 42 mm in acciaio. Steel tube Ø 42 mm.
Tube Ø 42 mm en acier. Stahlrohr Ø 42 mm.

FINITURE - FINISHES - EXECUTIONS - AUSFUEHRUNGEN

Veniciatura epossidica tutti i colori.
Ottonato - Nickel satinato - Alluminio - Cromato.
Epoxy painting every colour.
Brassed - Nickel satined - Aluminium - Chromed.
Peinture Epoxide chaque couleur.
Laitonné - Nickel satiné - Aluminium - Chrome.
Epoxy Lackierung jeder Farbe.
Vermessingt - Nickel satiniert - Aluminium - Verchromt.

MANART srl - 23876 MONTICELLO - FRAZ. CORTENUOVA (LC) ITALY - Via T. Moneta, 17 - Tel. 039.920.35.55 - 039.920.26.44 - Fax 039.920.28.01
www.manart.it e-mail: manart@manart.it

ART. 28

MODELLO DEPOSITATO

ALTEZZA - HEIGHT - HAUTER - HÖHE

Standard cm. 71 (regolabile fino a cm. 71/72) - Disponibile a richiesta per min. 200 pz.
Standard cm. 71 (adjustable to cm. 71/72) - Available by request for min. 200 pieces
Standard cm. 71 (réglable jusqu'à cm. 71/72) - De différentes hauteurs sont disponibles sur demande pour des quantités minimums de 200 pièces.
Standardmodell 71 cm (verstellbar bis 71/72 cm. Höhe) - Auf Anfrage in weiteren Höhen für mindestens 200 Stück erhaeltlich.

FISSAGGIO - FIXING - FIXAGE - FIXIERUNG

Piastra in ABS	Plate in ABS
Plaque en ABS	ABS-Platte

MATERIALE - MATERIAL - MATIÈRE - MATERIAL

Tubo Ø 60 mm. in acciaio	Steel tube Ø 60 mm.
Tube Ø 60 mm. en acier	Stahlrohr Ø 60 mm.

FINITURE - FINISHES - EXECUTIONS - AUSFUEHRUNGEN

Verniciatura epossidica tutti i colori.
Ottonato - Nickel satinato - Alluminio - Cromato.
Epoxy painting every colour.
Brassed - Nickel satined - Aluminium - Chromed.
Peinture Epoxide chaque couleur.
Laitonné - Nickel satiné - Aluminium - Chrome.
Epoxy Lackierung jeder Farbe.
Vermessingt - Nickel satiniert - Aluminium - Verchromt.

ART. 28

GAMBA PER TAVOLO SMONTABILE CON POSSIBILITÀ DI REGOLAZIONE

La ditta Manart con la creazione di questo nuovo tipo di piastra offre ai suoi clienti oltre alla possibilità di poter smontare le gambe dal piano o mobile a cui sono applicate, di ovviare ai classici regolabili applicati normalmente per la regolazione in altezza.

DETACHABLE LEG WITH POSSIBILITY OF ADJUSTMENT

As far as the possibility of disassembling the legs from the surface or piece of furniture to which they are applied, with the creation of this new type of plate Manart offers to his customers the possibility of obviating the now classical adjustable systems normally used for height adjustment.

PIED DE LA TABLE DEMONTABLE ET REGLABLE

Grâce à la création de cette nouvelle plaque de Sóciété Manart offre à ses clients, en plus de la possibilité de pouvoir démonter les pieds du dessus d'une table ou d'un meuble, où ils sont appliqués, aussi d'éviter les réglages typiques, appliqués normalement pour régler la hauteur.

ZERLEGBARES TISCHBEIN MIT VERSTALLUNGSMOEGLICHKEIT

Mit der Schaffung dieses neuen Plattentyps bietet Manart seinen Kunden neben der Moeglichkeit, die Tischbeine von der Tischplatte oder dem Moebelstueck an dem sie befestigt sind, abzumontieren, eine gute Alternative zu den verstellbaren klassischen Systemen, die normalerweise zur Hoehenverstellung verwandt werden.

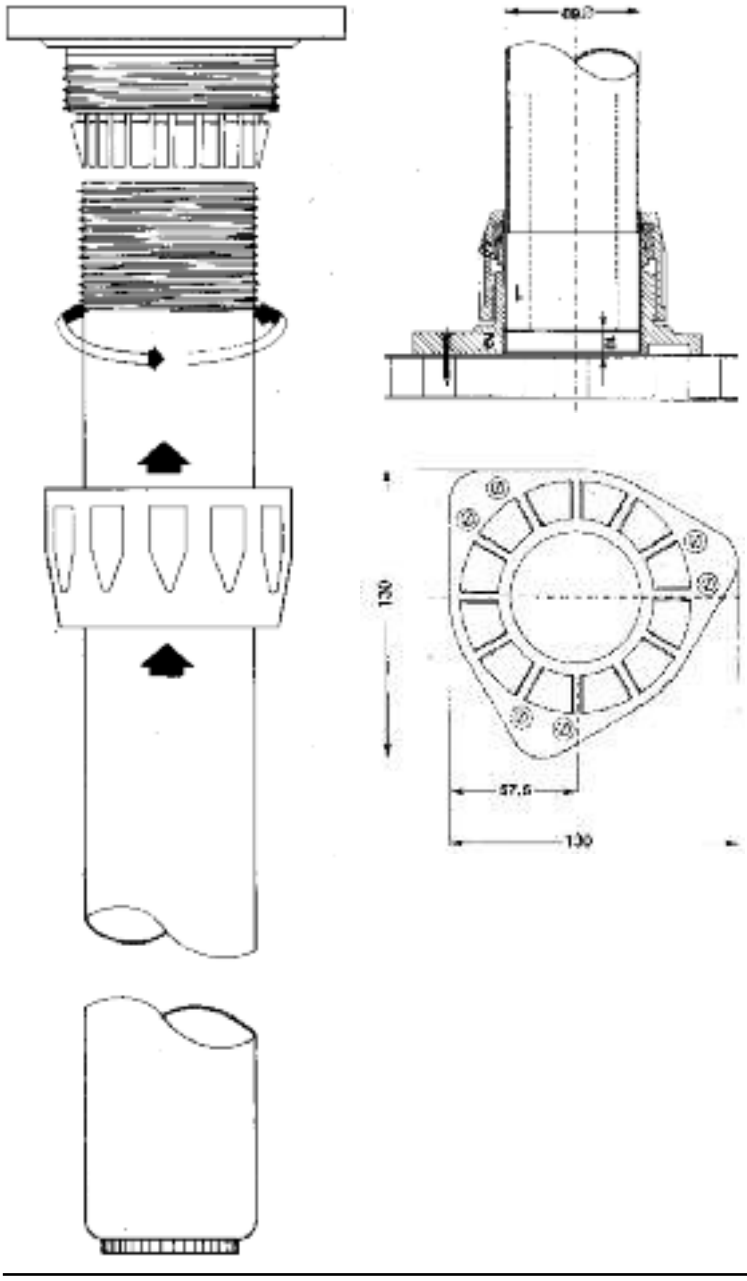

MONTAGGIO E REGOLAZIONE

1. Avvitare con le apposite viti le piastre al piano.
2. Allentare di 6/7 giri le ghiere avvitate sulle piastre.
   Avvitare totalmente le gambe sulle piastre e, nel caso ci siano dei dislivelli dovuti al pavimento, svitare una o più gambe fino al raggiungimento della stabilità del piano (regolazione max. 1 cm.).
3. Stringere le ghiere fino al bloccaggio delle gambe.
4. Smontaggio: ripetere le tre operazioni in senso contrario.

   N.B. Nelle operazioni di trasporto o magazzinaggio dei piani con le gambe smontate, lasciare sempre le ghiere avvitate totalmente sulle piastre.

HOW TO MOUNT AND TO ADJUST

1. Tighten the plates to the table by means of the screws.
2. Loosen by 6-7 turns the ring nuts screwed on the plates.
   Screw legs completely to the plates. It floor is not perfectly level, unscrew one or more legs until the table is steady (max. adjustment 1 cm.).
3. Tighten the ring nuts to lock the legs.
4. Disassembly: repeat the three operations the other way round.

   PS: During transportation or storage of plates with disassembled legs, keep ring nuts always completely screwed on the plates.

ASSEMBLAGE ET REGLAGE

1. Visser les plaques au plan avec les vis spéciales.
2. Desserrer de 6/7 tours les bagues vissées sur les plaques.
   Vissér complètement les pieds sur plaques et dans le cas que il y a des ressauts sur le plancher, devisser un ou plus pieds jusqu'à ce que la stabilité du plan est obtenue (réglage maximum 1 cm.).
3. Serrer les bagues jusqu'au blocage des pieds.
4. Démontage: répéter les trois opérations en sens inverse.

   Important: dans les opérations de tansport ou magasinage des plans avec les pieds démontés, il faut laisser toujours les bagues vissées complètement aux plaques.

MONTAGE UND REGULIEREN

1. Die Plaettchen mit Schrauben an Platte befestigen.
2. Die auf den Plaettchen angeschraubten Nutmuttern un 6-7 Drehungen lockern. Die Beine fest auf die Plaettchen schrauben. Bei durch Fussboden verursachtem Höhenunterschied ein oder mehrere Beine lockern, bis die Platte eben ist (max. 1 cm. regulieren).
3. Nutmuttern anziehen bis zur vollkommenen Befestigung der Beine.
4. Demontage: diese drei Aerbeiten in umgekehrter Weise ausfuehren.

   N.B. Waehrend des Transports und der Lagerung der Platten mit abmontierten Beinen muessen die Nutmuttern immer auf den Plaettchen aufgeschraubt bleiden.

MANART srl - 23876 MONTICELLO (LC) - Via T. Moneta, 17 - Fraz. Cortenuova - Tel. 039.9203555 - 039.9202644 - Fax 039.9202801
e-mail: manart@manart.it - www.manart.it

ART. 29

GAMBA PER TAVOLI
TABLE LEG
PIED DE TABLE
TISCHBEIN

ALTEZZA - HEIGHT - HAUTÊR - HÖHE

Disponibile a richiesta per quantità.
Standard: cm. 68 chiusa, allungabile fino a 87 cm
cm. 90 chiusa, allungabile fino a 110 cm.
Available for quantities on request.
Standard size 68 cm. extensible to 87 cm
90 cm. extensible to 110 cm.
Disponible sur demande pour quantitè.
Standard taille cm. 68 en position fermée alongeable jusqu'à 87 cm
cm. 90 en position fermée alongeable jusqu'à 110 cm.
Fuer Mengen auf Ersuchen verfuegbar.
Standard Mass cm. 68, geschlossen, ausziehbar bis zu 87 cm
cm. 90, geschlossen, ausziehbar bis zu 110 cm.

FISSAGGIO - FIXING - FIXAGE - FIXIERUNG

Piastra rotonda Ø 145 mm. - Round plate Ø 145 mm.
Plaque ronde Ø 145 mm. - Rundplatte Ø 145 mm.

MATERIALE - MATERIAL - MATIÉRE - MATERIAL

Acciaio/Steel/Acier/Stahl Ø 120 mm.

FINITURE - FINISHES - EXECUTIONS - AUSFUEHRUNGEN

Veniciatura epossidica tutti i colori.
Ottonato - Nickel satinato - Alluminio - Cromato.
Epoxy painting every colour.
Brassed - Nickel satined - Aluminium - Chromed.
Peinture Epoxide chaque couleur.
Laitonné - Nickel satiné - Aluminium - Chrome.
Epoxy Lackierung jeder Farbe.
Vermessingt - Nickel satiniert - Aluminium - Verchromt.

ART. 30

GAMBA PER TAVOLI
TABLE LEG
PIED DE TABLE
TISCHBEIN

ALTEZZA - HEIGHT - HAUTÊR - HÖHE

Disponibile a richiesta per quantità.
Standard: cm. 68 chiusa, allungabile fino a 87 cm
cm. 90 chiusa, allungabile fino a 110 cm.
Available for quantities on request.
Standard size 68 cm. extensible to 87 cm
90 cm. extensible to 110 cm.
Disponible sur demande pour quantitè.
Standard taille cm. 68 en position fermée alongeable jusqu'à 87 cm
cm. 90 en position fermée alongeable jusqu'à 110 cm.
Fuer Mengen auf Ersuchen verfuegbar.
Standard Mass cm. 68, geschlossen, ausziehbar bis zu 87 cm
cm. 90, geschlossen, ausziehbar bis zu 110 cm.

FISSAGGIO - FIXING - FIXAGE - FIXIERUNG

Piastra rotonda Ø 145 mm. - Round plate Ø 145 mm.
Plaque ronde Ø 145 mm. - Rundplatte Ø 145 mm.

MATERIALE - MATERIAL - MATIÉRE - MATERIAL

Acciaio/Steel/Acier/Stahl Ø 80 mm.

FINITURE - FINISHES - EXECUTIONS - AUSFUEHRUNGEN

Veniciatura epossidica tutti i colori.
Ottonato - Nickel satinato - Alluminio - Cromato.
Epoxy painting every colour.
Brassed - Nickel satined - Aluminium - Chromed.
Peinture Epoxide chaque couleur.
Laitonné - Nickel satiné - Aluminium - Chrome.
Epoxy Lackierung jeder Farbe.
Vermessingt - Nickel satiniert - Aluminium - Verchromt.

ART. 31

GAMBA PER TAVOLI
TABLE LEG
PIED DE TABLE
TISCHBEIN

ALTEZZA - HEIGHT - HAUTÊR - HÖHE

Disponibile a richiesta per quantità.
Standard: cm. 68 chiusa, allungabile fino a 87 cm
cm. 90 chiusa, allungabile fino a 110 cm.
Available for quantities on request.
Standard size 68 cm. extensible to 87 cm
90 cm. extensible to 110 cm.
Disponible sur demande pour quantitè.
Standard taille cm. 68 en position fermée alongeable jusqu'à 87 cm
cm. 90 en position fermée alongeable jusqu'à 110 cm.
Fuer Mengen auf Ersuchen verfuegbar.
Standard Mass cm. 68, geschlossen, ausziehbar bis zu 87 cm
cm. 90, geschlossen, ausziehbar bis zu 110 cm.

FISSAGGIO - FIXING - FIXAGE - FIXIERUNG

Piastra rotonda Ø 145 mm. - Round plate Ø 145 mm.
Plaque ronde Ø 145 mm. - Rundplatte Ø 145 mm.

MATERIALE - MATERIAL - MATIÉRE - MATERIAL

Base a calice in acciaio stampato Ø 300 mm. - Tubo Ø 80 mm in acciaio.
Globet-shaped base, pressed steel Ø 300 mm. - Steel tube Ø 80 mm.
Base évasee en métal estampé Ø 300 mm. - Tube Ø 80 mm en acier.
Kelchfoermiger gestanzter Fussteil aus Metall Ø 300 mm.
Stahlrohr Ø 80 mm.

FINITURE - FINISHES - EXECUTIONS - AUSFUEHRUNGEN

Veniciatura epossidica tutti i colori.
Ottonato - Nickel satinato - Alluminio - Cromato.
Epoxy painting every colour.
Brassed - Nickel satined - Aluminium - Chromed.
Peinture Epoxide chaque couleur.
Laitonné - Nickel satiné - Aluminium - Chrome.
Epoxy Lackierung jeder Farbe.
Vermessingt - Nickel satiniert - Aluminium - Verchromt.

ART. 32

GAMBA PER TAVOLI
TABLE LEG
PIED DE TABLE
TISCHBEIN

ALTEZZA - HEIGHT - HAUTÊR - HÖHE

Disponibile a richiesta per quantità.
Standard: cm. 68 chiusa, allungabile fino a 87 cm
cm. 90 chiusa, allungabile fino a 110 cm.
Available for quantities on request.
Standard size 68 cm. extensible to 87 cm
90 cm. extensible to 110 cm.
Disponible sur demande pour quantitè.
Standard taille cm. 68 en position fermée alongeable jusqu'à 87 cm
cm. 90 en position fermée alongeable jusqu'à 110 cm.
Fuer Mengen auf Ersuchen verfuegbar.
Standard Mass cm. 68, geschlossen, ausziehbar bis zu 87 cm
cm. 90, geschlossen, ausziehbar bis zu 110 cm.

FISSAGGIO - FIXING - FIXAGE - FIXIERUNG

Piastra rotonda Ø 145 mm. - Round plate Ø 145 mm.
Plaque ronde Ø 145 mm. - Rundplatte Ø 145 mm.

MATERIALE - MATERIAL - MATIÉRE - MATERIAL

Base a calice in acciaio stampato Ø 300 mm. Tubo acciaio Ø 120 mm.
Globet-shaped base, pressed steel Ø 300 mm. Steel tube Ø 120 mm.
Base évasee en métal estampé Ø 300 mm. Tube acier Ø 120 mm.
Kelchfoermiger gestanzter Fussteil aus Metall Ø 300 mm.
Stahlrohr Ø 120 mm.

FINITURE - FINISHES - EXECUTIONS - AUSFUEHRUNGEN

Veniciatura epossidica tutti i colori.
Ottonato - Nickel satinato - Alluminio - Cromato.
Epoxy painting every colour.
Brassed - Nickel satined - Aluminium - Chromed.
Peinture Epoxide chaque couleur.
Laitonné - Nickel satiné - Aluminium - Chrome.
Epoxy Lackierung jeder Farbe.
Vermessingt - Nickel satiniert - Aluminium - Verchromt.

MANART srl - 23876 MONTICELLO - FRAZ. CORTENUOVA (LC) ITALY - Via T. Moneta, 17 - Tel. 039.920.35.55 - 039.920.26.44 - Fax 039.920.28.01
www.manart.it e-mail: manart@manart.it

ART. 33

GAMBA PER TAVOLI
TABLE LEG
PIED DE TABLE
TISCHBEIN

ALTEZZA - HEIGHT - HAUTÊR - HÖHE

Standard 71 cm.
Standard 71 cm.
Standard 71 cm.
Standard 71 cm.

FISSAGGIO - FIXING - FIXAGE - FIXIERUNG

Piastra rotonda Ø 145 mm.
Round plate Ø 145 mm.Plaque ronde Ø 145 mm.
Rundplatte Ø 145 mm.

MATERIALE - MATERIAL - MATIÉRE - MATERIAL

Tubo Ø 12 mm in acciaio.
Steel tube Ø 12 mm.
Tube Ø 12 mm en acier.
Stahlrohr Ø 12 mm.

FINITURE - FINISHES - EXECUTIONS - AUSFUEHRUNGEN

Veniciatura epossidica tutti i colori.
Ottonato - Nickel satinato - Alluminio - Cromato.
Epoxy painting every colour.
Brassed - Nickel satined - Aluminium - Chromed.
Peinture Epoxide chaque couleur.
Laitonné - Nickel satiné - Aluminium - Chrome.
Epoxy Lackierung jeder Farbe.
Vermessingt - Nickel satiniert - Aluminium - Verchromt.

ART. 34

GAMBA PER TAVOLI
TABLE LEG
PIED DE TABLE
TISCHBEIN

ALTEZZA - HEIGHT - HAUTÊR - HÖHE

Standard 71 cm.
Standard 71 cm.
Standard 71 cm.
Standard 71 cm.

FISSAGGIO - FIXING - FIXAGE - FIXIERUNG

Piastra rotonda Ø 145 mm.
Round plate Ø 145 mm.Plaque ronde Ø 145 mm.
Rundplatte Ø 145 mm.

MATERIALE - MATERIAL - MATIÉRE - MATERIAL

Tubo Ø 12 mm in acciaio.
Steel tube Ø 12 mm.
Tube Ø 12 mm en acier.
Stahlrohr Ø 12 mm.

FINITURE - FINISHES - EXECUTIONS - AUSFUEHRUNGEN

Veniciatura epossidica tutti i colori.
Ottonato - Nickel satinato - Alluminio - Cromato.
Epoxy painting every colour.
Brassed - Nickel satined - Aluminium - Chromed.
Peinture Epoxide chaque couleur.
Laitonné - Nickel satiné - Aluminium - Chrome.
Epoxy Lackierung jeder Farbe.
Vermessingt - Nickel satiniert - Aluminium - Verchromt.

ART. 36

GAMBA PER TAVOLI
TABLE LEG
PIED DE TABLE
TISCHBEIN

ALTEZZA - HEIGHT - HAUTÊR - HÖHE

Standard 71 cm. Terminale fisso.
Standard 71 cm. Fixed Leg.
Standard 71 cm. Pied fixe.
Standard 71 cm. Festes Bein.

FISSAGGIO - FIXING - FIXAGE - FIXIERUNG

Piastra rotonda Ø 145 mm.
Round plate Ø 145 mm.Plaque ronde Ø 145 mm.
Rundplatte Ø 145 mm.

MATERIALE - MATERIAL - MATIÉRE - MATERIAL

Tubo Ø 20 mm in acciaio.
Steel tube Ø 20 mm.
Tube Ø 20 mm en acier.
Stahlrohr Ø 20 mm.

FINITURE - FINISHES - EXECUTIONS - AUSFUEHRUNGEN

Veniciatura epossidica tutti i colori.
Ottonato - Nickel satinato - Alluminio - Cromato.
Epoxy painting every colour.
Brassed - Nickel satined - Aluminium - Chromed.
Peinture Epoxide chaque couleur.
Laitonné - Nickel satiné - Aluminium - Chrome.
Epoxy Lackierung jeder Farbe.
Vermessingt - Nickel satiniert - Aluminium - Verchromt.

ART. 37

GAMBA PER TAVOLI
TABLE LEG
PIED DE TABLE
TISCHBEIN

ALTEZZA - HEIGHT - HAUTÊR - HÖHE

Standard 71 cm.
Standard 71 cm.
Standard 71 cm.
Standard 71 cm.

FISSAGGIO - FIXING - FIXAGE - FIXIERUNG

Piastra 120 x 120 mm.
Plate 120 x 120 mm.
Plaque 120 x 120 mm.
Platte 120 x 120.

MATERIALE - MATERIAL - MATIÉRE - MATERIAL

Tubo Ø 12 mm in acciaio.
Steel tube Ø 12 mm.
Tube Ø 12 mm en acier.
Stahlrohr Ø 12 mm.

FINITURE - FINISHES - EXECUTIONS - AUSFUEHRUNGEN

Veniciatura epossidica tutti i colori.
Ottonato - Nickel satinato - Alluminio - Cromato.
Epoxy painting every colour.
Brassed - Nickel satined - Aluminium - Chromed.
Peinture Epoxide chaque couleur.
Laitonné - Nickel satiné - Aluminium - Chrome.
Epoxy Lackierung jeder Farbe.
Vermessingt - Nickel satiniert - Aluminium - Verchromt.

MANART srl - 23876 MONTICELLO - FRAZ. CORTENUOVA (LC) ITALY - Via T. Moneta, 17 - Tel. 039.920.35.55 - 039.920.26.44 - Fax 039.920.28.01
www.manart.it e-mail: manart@manart.it

ART. 38 R

GAMBA PER TAVOLI CONIFICATA Ø 70
CONICAL TABLE LEG Ø 70
PIED DE TABLE CONIQUE Ø 70
KONISCHE TISCHBEIN Ø 70

ALTEZZA - HEIGHT - HAUTÊR - HÖHE

Standard 71 cm. Terminale regolabile max 1 cm.
Standard size 71 cm. Adjustable leg max 1 cm.
Standard taille 71 cm. Pied reglable max 1 cm.
Standard Mass 71 cm. Verstellbaresbein max 1 cm.

FISSAGGIO - FIXING - FIXAGE - FIXIERUNG

Piastra alluminio, smontabile.
Aluminium plate, detachable.
Aluminium plaque, demontable.
Aluminium Platte, Zerlegbares.

MATERIALE - MATERIAL - MATIÉRE - MATERIAL

Tubo Ø 70 mm. in acciaio.
Steel tube Ø 70 mm.
Tube Ø 70 mm. en acier.
Stahlrohr Ø 70 mm.

FINITURE - FINISHES - EXECUTIONS - AUSFUEHRUNGEN

Veniciatura epossidica tutti i colori.
Ottonato - Nickel satinato - Alluminio - Cromato.
Epoxy painting every colour.
Brassed - Nickel satined - Aluminium - Chromed.
Peinture Epoxide chaque couleur.
Laitonné - Nickel satiné - Aluminium - Chrome.
Epoxy Lackierung jeder Farbe.
Vermessingt - Nickel satiniert - Aluminium - Verchromt.

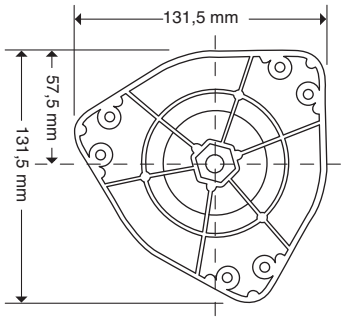

ART. 38 R

Terminale regolabile max 1 cm.
Adjustable leg max 1 cm.
Pied reglable max 1 cm.
Verstellbaresbein max 1 cm.

ART. 38 ROLLER

Gamba da tavolo con ruota piroettante dotata di freno
di bloccaggio sulla ruota e sull'asse piroettante.
Leg with turning castor with simultaneous brake
of blockade on the turning axis.
Pied avec virevolant route avec frein de blocage simultané
sur la route et sur l'axie virevolant.
Tischbeine drehbare Rolle, mit simultaner Blockierungsbremse
auf dem Rad und der drehbaren Achse.

ART. 38 R GLASS

FISSAGGIO - FIXING - FIXAGE - FIXIERUNG

Con piastra in acciaio inox per applicazione su vetro e cristallo.
With inox steel plate for application on glass and crystal.
Avec plaque en acier pour l'application sur verre et cristal.
Mit inox Sthalplatte fuer die Anwendung auf Glas und Kristall.

ART. 39 R

GAMBA PER TAVOLI
CONIFICATA Ø 70
CONICAL TABLE LEG Ø 70
PIED DE TABLE CONIQUE Ø 70
KONISCHE TISCHBEIN Ø 70

ALTEZZA - HEIGHT - HAUTÊR - HÖHE

Standard 71 cm. Terminale regolabile max 1 cm.
Standard size 71 cm. Adjustable leg max 1 cm.
Standard taille 71 cm. Pied reglable max 1 cm.
Standard Mass 71 cm. Verstellbaresbein max 1 cm.

FISSAGGIO - FIXING - FIXAGE - FIXIERUNG

Con perni 8MA sulla fascia del tavolo.
With pins 8MA on the table band.
Avec chevilles 8MA sur la bande du table.
Mit Bolzen 8MA auf dem Tischband.

MATERIALE - MATERIAL - MATIÉRE - MATERIAL

Tubo Ø 70 mm. in acciaio.
Steel tube Ø 70 mm.
Tube Ø 70 mm en acier.
Stahlrohr Ø 70 mm.

FINITURE - FINISHES - EXECUTIONS - AUSFUEHRUNGEN

Verniciatura epossidica tutti i colori.
Ottonato - Nickel satinato - Alluminio - Cromato.
Epoxy painting every colour.
Brassed - Nickel satined - Aluminium - Chromed.
Peinture Epoxide chaque couleur.
Laitonné - Nickel satiné - Aluminium - Chrome.
Epoxy Lackierung jeder Farbe.
Vermessingt - Nickel satiniert - Aluminium - Verchromt.

ART. 40

ALTEZZA - HEIGHT - HAUTÊR - HÖHE

Standard 71 cm.
Standard size 71 cm.
Standard taille 71 cm.
Standard Mass 71 cm.

FISSAGGIO - FIXING - FIXAGE - FIXIERUNG

Piastra 120 x 120 mm.
Plate 120 x 120 mm.
Plaque 120 x 120 mm.
Platte 120 x 120 mm.

MATERIALE - MATERIAL - MATIÉRE - MATERIAL

Tubo Ø 12 mm. in acciaio.
Steel tube Ø 12 mm.
Tube Ø 12 mm en acier.
Stahlrohr Ø 12 mm.

FINITURE - FINISHES - EXECUTIONS - AUSFUEHRUNGEN

Verniciatura epossidica tutti i colori.
Ottonato - Nickel satinato - Alluminio - Cromato.
Epoxy painting every colour.
Brassed - Nickel satined - Aluminium - Chromed.
Peinture Epoxide chaque couleur.
Laitonné - Nickel satiné - Aluminium - Chrome.
Epoxy Lackierung jeder Farbe.
Vermessingt - Nickel satiniert - Aluminium - Verchromt.

MANART srl - 23876 MONTICELLO - FRAZ. CORTENUOVA (LC) ITALY - Via T. Moneta, 17 - Tel. 039.920.35.55 - 039.920.26.44 - Fax 039.920.28.01
www.manart.it e-mail: manart@manart.it

ART. 41

GAMBA PER TAVOLI
TABLE LEG
PIED DE TABLE
TISCHBEIN

ALTEZZA - HEIGHT - HAUTÊR - HÖHE

Standard 71 cm. Disponibile a richiesta per quantità.
Standard size 71 cm. Available for quantities on request.
Standard taille 71 cm. Disponible sur demande pour quantitè.
Standard Mass 71 cm. Fuer Mengen auf Ersuchen verfuegbar.

MATERIALE - MATERIAL - MATIÉRE - MATERIAL

Tubo Ø 50 mm. in acciaio.
Tube Ø 50 mm. en acier.
Steel tube Ø 50 mm.
Stahlrohr Ø 50 mm.

FINITURE - FINISHES - EXECUTIONS - AUSFUEHRUNGEN

Verniciatura epossidica tutti i colori.
Ottonato - Nickel satinato - Alluminio - Cromato.
Epoxy painting every colour.
Brassed - Nickel satined - Aluminium - Chromed.
Peinture Epoxide chaque couleur.
Laitonné - Nickel satiné - Aluminium - Chrome.
Epoxy Lackierung jeder Farbe.
Vermessingt - Nickel satiniert - Aluminium - Verchromt.

FISSAGGIO - FIXING - FIXAGE - FIXIERUNG

Piastra triangolare 122x122x122 mm. - saldata
Triangular plate 122x122x122 mm. - welded.
Plaque triangulaire 122x122x122 mm. - soudée.
Dreieckige Platte 122x122x122 mm. - geschweisst.

ART. 41 R

Terminale regolabile max 3 cm.
Adjustable leg max 3 cm.
Pied reglable max 3 cm.
Verstellbaresbein max 3 cm.

ART. 41 F

Terminale fisso.
Fixed leg.
Pied fixe.
Festes Bein.

ART. 41 ROLLER

Gambe da tavolo con ruota piroettante dotata di freno di bloccaggio sulla ruota e sull'asse piroettante.
Leg with turning castor with simultaneous brake of blockade on the turning axis.
Pied avec virevolant route, avec frein de bloccage simultané sur la route et sur l'axe virevolant.
Tischbeine mit drehbare Rolle, mit simultaner Blockierungs bremse auf dem Rad und der drehbaren Achse.

ART. 42

GAMBA PER TAVOLI
TABLE LEG
PIED DE TABLE
TISCHBEIN

ALTEZZA - HEIGHT - HAUTÊR - HÖHE

Standard 71 cm. Disponibile a richiesta per quantità.
Standard size 71 cm. Available for quantities on request.
Standard taille 71 cm. Disponible sur demande pour quantitè.
Standard Mass 71 cm. Fuer Mengen auf Ersuchen verfuegbar.

MATERIALE - MATERIAL - MATIÉRE - MATERIAL

Tubo Ø 60 mm. in acciaio.
Steel tube Ø 60 mm.
Tube Ø 60 mm. en acier.
Stahlrohr Ø 60 mm.

FINITURE - FINISHES - EXECUTIONS - AUSFUEHRUNGEN

Verniciatura epossidica tutti i colori.
Ottonato - Nickel satinato - Alluminio - Cromato.
Epoxy painting every colour.
Brassed - Nickel satined - Aluminium - Chromed.
Peinture Epoxide chaque couleur.
Laitonné - Nickel satiné - Aluminium - Chrome.
Epoxy Lackierung jeder Farbe.
Vermessingt - Nickel satiniert - Aluminium - Verchromt.

FISSAGGIO - FIXING - FIXAGE - FIXIERUNG

Piastra triangolare 122x122x122 mm. - saldata
Triangular plate 122x122x122 mm. - welded.
Plaque triangulaire 122x122x122 mm. - soudée.
Dreieckige Platte 122x122x122 mm. - geschweisst.

ART. 42 R

Terminale regolabile max 3 cm.
Adjustable leg max 3 cm.
Pied reglable max 3 cm.
Verstellbaresbein max 3 cm.

ART. 42 F

Terminale fisso.
Fixed leg.
Pied fixe.
Festes Bein.

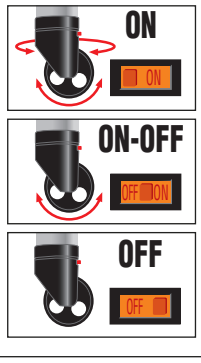

ART. 42 ROLLER

Gambe da tavolo con ruota piroettante dotata di freno di bloccaggio sulla ruota e sull'asse piroettante.
Leg with turning castor with simultaneous brake of blockade on the turning axis.
Pied avec virevolant route, avec frein de bloccage simultané sur la route et sur l'axe virevolant.
Tischbeine mit drehbare Rolle, mit simultaner Blockierungs bremse auf dem Rad und der drehbaren Achse.

MANART srl - 23876 MONTICELLO - FRAZ. CORTENUOVA (LC) ITALY - Via T. Moneta, 17 - Tel. 039.920.35.55 - 039.920.26.44 - Fax 039.920.28.01
www.manart.it e-mail: manart@manart.it

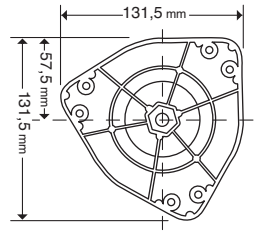

ART. 43

GAMBA PER TAVOLO ALLUNGABILE
EXTENSIBLE TABLE LEG
PIED DE TABLE EXTENSIBLE
VERLAENGERBAR TISCHBEIN

ALTEZZA - HEIGHT - HAUTÊR - HÖHE

Standard cm. 68 chiusa, allungabile fino a 88 cm.
Standard size 68 cm. extensible to 88 cm.
Standard taille cm. 68 en position fermée alongeable jusqu'à 88 cm.
Standard Mass cm. 68, geschlossen, ausziehbar bis zu 88 cm.

FISSAGGIO - FIXING - FIXAGE - FIXIERUNG

Piastra alluminio.
Alluminium plate.
Alluminium plaque.
Alluminium Platte.

MATERIALE - MATERIAL - MATIÉRE - MATERIAL

Tubo Ø 60 mm. in acciaio.
Steel tube Ø 60 mm.
Tube Ø 60 mm. en acier.
Stahlrohr Ø 60 mm.

FINITURE - FINISHES - EXECUTIONS - AUSFUEHRUNGEN

Veniciatura epossidica tutti i colori.
Ottonato - Nickel satinato - Alluminio - Cromato.
Epoxy painting every colour.
Brassed - Nickel satined - Aluminium - Chromed.
Peinture Epoxide chaque couleur.
Laitonné - Nickel satiné - Aluminium - Chrome.
Epoxy Lackierung jeder Farbe.
Vermessingt - Nickel satiniert - Aluminium - Verchromt.

ISTRUZIONI PER IL MONTAGGIO • *MOUNTING INSTRUCTIONS • INSTRUCTIONS DE MONTAGE • MONTAGEANWEISUNGEN*

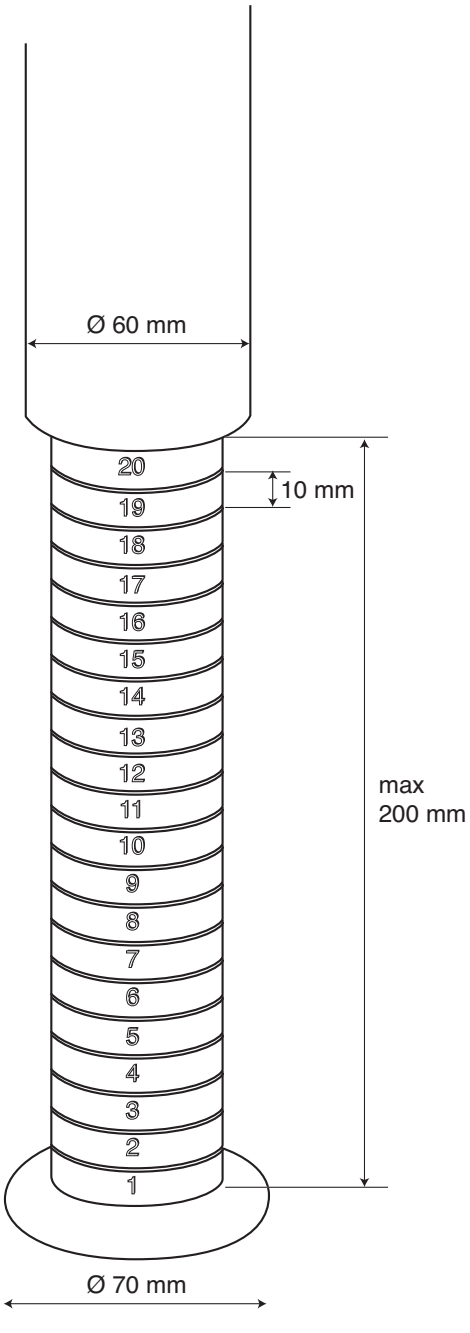

MANART srl - 23876 MONTICELLO - FRAZ. CORTENUOVA (LC) ITALY - Via T. Moneta, 17 - Tel. 039.920.35.55 - 039.920.26.44 - Fax 039.920.28.01
www.manart.it e-mail: manart@manart.it

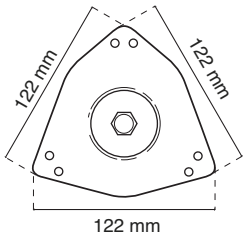

ART. 44R

GAMBA PER TAVOLI
TABLE LEG
PIED DE TABLE
TISCHBEIN

ALTEZZA - HEIGHT - HAUTÊR - HÖHE

Standard cm 71. Terminale regolabile. Disponibile a richiesta per quantità.
Standard size cm 71. Adjustable leg. Available for quantities on request.
Standard taille cm 71. Pied reglabel. Disponible sur demande pour quantitè.
Standard Mass cm 71. Verstellbaresbein. Fuer Mangen auf Ersuchen verfuebar.

FISSAGGIO - FIXING - FIXAGE - FIXIERUNG

Piastra triangolare in acciaio 122x122x122 mm, smontabile
Steel triangular plate 122x122x122 mm, detachable
Plaque triangulaire en acier 122x122x122 mm, demontable
Dreieckige Stahl-Platte 122x122x122 mm, Zerlegbares

MATERIALE - MATERIAL - MATIÉRE - MATERIAL

Tubo 60x60 mm in acciaio.
Steel tube 60x60 mm.
Tube 60x60 mm en acier.
Stahlrohr 60x60 mm.

FINITURE - FINISHES - EXECUTIONS - AUSFUEHRUNGEN

Verniciatura epossidica tutti i colori.
Ottonato - Nickel satinato - Alluminio - Cromato.
Epoxy painting every colour.
Brassed - Nickel satined - Aluminium - Chromed.
Peinture Epoxide chaque couleur.
Laitonné - Nickel satiné - Aluminium - Chrome.
Epoxy Lackierung jeder Farbe.
Vermessingt - Nickel satiniert - Aluminium - Verchromt.

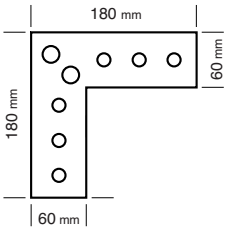

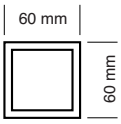

ART. 44/L

GAMBA PER TAVOLI
TABLE LEG
PIED DE TABLE
TISCHBEIN

ALTEZZA - HEIGHT - HAUTÊR - HÖHE

Standard cm 71. Terminale regolabile. Disponibile a richiesta per quantità.
Standard size cm 71. Adjustable leg. Available for quantities on request.
Standard taille cm 71. Pied reglabel. Disponible sur demande pour quantitè.
Standard Mass cm 71. Verstellbaresbein. Fuer Mangen auf Ersuchen verfuebar.

FISSAGGIO - FIXING - FIXAGE - FIXIERUNG

Piastra in acciaio, smontabile
Steel plate, detachable
Plaque en acier, demontable
Stahl-Platte, Zerlegbares

MATERIALE - MATERIAL - MATIÉRE - MATERIAL

Tubo 60x60 mm in acciaio.
Steel tube 60x60 mm.
Tube 60x60 mm en acier.
Stahlrohr 60x60 mm.

FINITURE - FINISHES - EXECUTIONS - AUSFUEHRUNGEN

Verniciatura epossidica tutti i colori.
Ottonato - Nickel satinato - Alluminio - Cromato.
Epoxy painting every colour.
Brassed - Nickel satined - Aluminium - Chromed.
Peinture Epoxide chaque couleur.
Laitonné - Nickel satiné - Aluminium - Chrome.
Epoxy Lackierung jeder Farbe.
Vermessingt - Nickel satiniert - Aluminium - Verchromt.

ART. 45R

GAMBA PER TAVOLI
TABLE LEG
PIED DE TABLE
TISCHBEIN

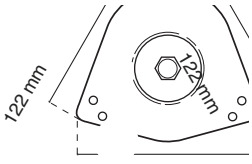

122 mm

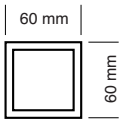

ALTEZZA - HEIGHT - HAUTÊR - HÖHE

Standard cm 71. Terminale regolabile. Disponibile a richiesta per quantità.
Standard size cm 71. Adjustable leg. Available for quantities on request.
Standard taille cm 71. Pied reglabel. Disponible sur demande pour quantitè.
Standard Mass cm 71. Verstellbaresbein. Fuer Mangen auf Ersuchen verfuebar.

FISSAGGIO - FIXING - FIXAGE - FIXIERUNG

Piastra triangolare in acciaio 122x122x122 mm - saldata.
Steel triangular plate 122x122x122 mm - welded.
Plaque triangulaire en acier 122x122x122 mm - soudée.
Dreieckige Stahl-Platte 122x122x122 mm - geschweisst.

MATERIALE - MATERIAL - MATIÉRE - MATERIAL

Tubo 60x60 mm in acciaio.
Tube 60x60 mm en acier.
Steel tube 60x60 mm.
Stahlrohr 60x60 mm.

FINITURE - FINISHES - EXECUTIONS - AUSFUEHRUNGEN

Veniciatura epossidica tutti i colori.
Ottonato - Nickel satinato - Alluminio - Cromato.
Epoxy painting every colour.
Brassed - Nickel satined - Aluminium - Chromed.
Peinture Epoxide chaque couleur.
Laitonné - Nickel satiné - Aluminium - Chrome.
Epoxy Lackierung jeder Farbe.
Vermessingt - Nickel satiniert - Aluminium - Verchromt.

ART. 46R

GAMBA PER TAVOLI
TABLE LEG
PIED DE TABLE
TISCHBEIN

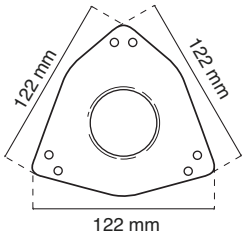

ALTEZZA - HEIGHT - HAUTÊR - HÖHE

Standard cm 71. Terminale regolabile. Disponibile a richiesta per quantità.
Standard size cm 71. Adjustable leg. Available for quantities on request.
Standard taille cm 71. Pied reglabel. Disponible sur demande pour quantitè.
Standard Mass cm 71. Verstellbaresbein. Fuer Mangen auf Ersuchen verfuebar.

FISSAGGIO - FIXING - FIXAGE - FIXIERUNG

Piastra triangolare in acciaio 122x122x122 mm - saldata.
Steel triangular plate 122x122x122 mm - welded.
Plaque triangulaire en acier 122x122x122 mm - soudée.
Dreieckige Stahl-Platte 122x122x122 mm - geschweisst.

MATERIALE - MATERIAL - MATIÉRE - MATERIAL

Tubo 50x50 mm in acciaio.
Steel tube 50x50 mm.
Tube 50x50 mm en acier.
Stahlrohr 50x50 mm.

FINITURE - FINISHES - EXECUTIONS - AUSFUEHRUNGEN

Verniciatura epossidica tutti i colori.
Ottonato - Nickel satinato - Alluminio - Cromato.
Epoxy painting every colour.
Brassed - Nickel satined - Aluminium - Chromed.
Peinture Epoxide chaque couleur.
Laitonné - Nickel satiné - Aluminium - Chrome.
Epoxy Lackierung jeder Farbe.
Vermessingt - Nickel satiniert - Aluminium - Verchromt.

MANART srl - 23876 MONTICELLO - FRAZ. CORTENUOVA (LC) ITALY - Via T. Moneta, 17 - Tel. 039.920.35.55 - 039.920.26.44 - Fax 039.920.28.01
www.manart.it e-mail: manart@manart.it

ART. 47

GAMBA PER TAVOLI
TABLE LEG
PIED DE TABLE
TISCHBEIN

ALTEZZA - HEIGHT - HAUTÊR - HÖHE

Standard 71 cm. Terminale fisso. Disponibile a richiesta per quantità.
Standard size 71 cm. Fixed Leg. Available for quantities on request.
Standard taille 71 cm. Pied fixe. Disponible sur demande pour quantitè.
Standard Mass 71 cm. Festes Bein. Fuer Mengen auf Ersuchen verfuegbar.

FISSAGGIO - FIXING - FIXAGE - FIXIERUNG

Piastra acciaio. Ø 145 mm - saldata.
Steel plate. Ø 145 mm - welded.
Acier palque. Ø 145 mm - soudée.
Stahlplatte. Ø 145 mm - geschweisst.

MATERIALE - MATERIAL - MATIÉRE - MATERIAL

Tubo Ø 40 mm in acciaio.
Steel tube Ø 40 mm.
Tube Ø 40 mm en acier.
Stahlrohr Ø 40 mm.

FINITURE - FINISHES - EXECUTIONS - AUSFUEHRUNGEN

Verniciatura epossidica tutti i colori.
Ottonato - Nickel satinato - Alluminio - Cromato.
Epoxy painting every colour.
Brassed - Nickel satined - Aluminium - Chromed.
Peinture Epoxide chaque couleur.
Laitonné - Nickel satiné - Aluminium - Chrome.
Epoxy Lackierung jeder Farbe.
Vermessingt - Nickel satiniert - Aluminium - Verchromt.

ART. 48

GAMBA PER TAVOLI
TABLE LEG
PIED DE TABLE
TISCHBEIN

ALTEZZA - HEIGHT - HAUTÊR - HÖHE

Standard 71 cm. Con ruote. Disponibile a richiesta per quantità.
Standard size 71 cm. With castor. Available for quantities on request.
Standard taille 71 cm. Avec route. Disponible sur demande pour quantitè.
Standard Mass 71 cm. Mit Rolle. Fuer Mengen auf Ersuchen verfuegbar.

FISSAGGIO - FIXING - FIXAGE - FIXIERUNG

Piastra rotonda Ø 145 mm - saldata.
Round plate. Ø 145 mm - welded.
Palque ronde. Ø 145 mm - soudée.
Rundplatte. Ø 145 mm - geschweisst.

MATERIALE - MATERIAL - MATIÉRE - MATERIAL

Tubo Ø 35 mm in acciaio.
Steel tube Ø 35 mm.
Tube Ø 35 mm en acier.
Stahlrohr Ø 35 mm.

FINITURE - FINISHES - EXECUTIONS - AUSFUEHRUNGEN

Verniciatura epossidica tutti i colori.
Ottonato - Nickel satinato - Alluminio - Cromato.
Epoxy painting every colour.
Brassed - Nickel satined - Aluminium - Chromed.
Peinture Epoxide chaque couleur.
Laitonné - Nickel satiné - Aluminium - Chrome.
Epoxy Lackierung jeder Farbe.
Vermessingt - Nickel satiniert - Aluminium - Verchromt.

ART. 250

GAMBA PER TAVOLI Ø 60
TABLE LEG Ø 60
PIED POUR TABLE Ø 60
TISCHBEIN Ø 60

ALTEZZA - HEIGHT - HAUTÊR - HÖHE

Standard 71 cm. Disponibile a richiesta per quantità.
Standard size 71 cm. Available for quantities on request.
Standard taille 71 cm. Disponible sur demande pour quantitè.
Standard Mass 71 cm. Fuer Mengen auf Ersuchen verfuegbar.

MATERIALE - MATERIAL - MATIÉRE - MATERIAL

Tubo Ø 60 mm. in acciaio.
Steel tube Ø 60 mm.
Tube Ø 60 mm. en acier.
Stahlrohr Ø 60 mm.

FINITURE - FINISHES - EXECUTIONS - AUSFUEHAUNGEN

Verniciatura epossidica tutti i colori.
Ottonato - Nickel satinato - Alluminio - Cromato.
Epoxy painting every colour.
Brassed - Nickel satined - Aluminium - Chromed.
Peinture Epoxide chaque couleur.
Laitonné - Nickel satiné - Aluminium - Chrome.
Epoxy Lackierung jeder Farbe.
Vermessingt - Nickel satiniert - Aluminium - Verchromt.

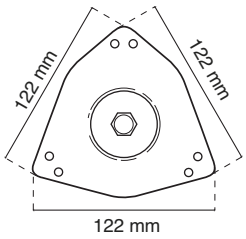

FISSAGGIO - FIXING - FIXAGE - FIXIERUNG

Piastra in acciaio 122x122x122 mm, smontabile
Steel plate 122x122x122 mm, detachable
Plaque en acier 122x122x122 mm, demontable
Stahl-Platte 122x122x122 mm, Zerlegbares

ART. 250 R

Terminale regolabile max 3 cm.
Adjustable leg max 3 cm.
Pied reglable max 3 cm.
Verstellbaresbein max 3 cm.

ART. 250 F

Terminale fisso.
Fixed leg.
Pied fixe.
Festes Bein.

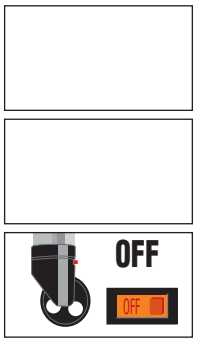

ART. 250 ROLLER

Gambe da tavolo con ruota piroettante dotata di freno di bloccaggio sulla ruota e sull'asse piroettante.
Leg with turning castor with simultaneous brake of blockade on the turning axis.
Pied avec virevolant route, avec frein de bloccage simultané sur la route et sur l'axe virevolant.
Tischbeine mit drehbare Rolle, mit simultaner Blockierungs bremse auf dem Rad und der drehbaren Achse.

ISTRUZIONI PER IL MONTAGGIO - MOUNTING INSTRUCTIONS
INSTRUCTIONS DE MONTAGE - MONTAGEANWEISUNGEN

INSERIRE IL BULLONE A VITE NELLA PIASTRA.

INSERT THE BOLT IN THE MOUNTING PLATE.

INTRODUIRE LE BOULON DANS LA PLAQUE DE MONTAGE.

DEN SCHRAUBBOLZEN IN DIE BEFESTIGUNGSPLATTE EINFÜHREN.

POSIZIONARE LA PIASTRA SUL PIANO E FISSARLA CON LE APPOSITE VITI.

POSITION THE PLATE ON THE TABLE AND FASTEN WITH THE AVAILABLE SCREWS.

POSITIONNER LA PLAQUE SUR LA TABLE ET VISSER LA MEME AVEC LES VIS SPECIALES.

DIE BEFESTIGUNGSPLATTE AUF DER TISCHPLATTE POSITIONIEREN UND MIT DEN SPEZIELL DAFÜR VORGESEHENEN SCHRAUBEN FESTSCHRAUBEN.

AVVITARE LA GAMBA SUL BULLONE A VITE DELLA PIASTRA STRINGENDOLA BENE.

SCREW UP THE LEG ON THE BOLT OF THE MOUNTING PLATE.

VISSER ET SERRER LE PIED SUR LE BOULON DE LA PLAQUE DE MONTAGE.

DAS TISCHBEIN AUF DEN SCHRAUBBOLZEN DER BEFESTIGUNGSPLATTE FEST AUFSCHRAUBEN.

MANART srl - 23876 MONTICELLO - FRAZ. CORTENUOVA (LC) ITALY - Via T. Moneta, 17 - Tel. 039.920.35.55 - 039.920.26.44 - Fax 039.920.28.01
www.manart.it e-mail: manart@manart.it

ART. 251

GAMBA PER TAVOLI
TABLE LEG
PIED DE TABLE
TISCHBEIN

ALTEZZA - HEIGHT - HAUTÊR - HÖHE

Standard 71 e 87 cm. Disponibile a richiesta per quantità.
Standard size 71 and 87 cm. Available for quantities on request.
Standard taille 71 et 87 cm. Disponible sur demande pour quantitè.
Standard Mass 71 und 87 cm. Fuer Mengen auf Ersuchen verfuegbar.

FISSAGGIO - FIXING - FIXAGE - FIXIERUNG

Piastra in zama - smontabile.
Zamak plate - detachable.
Plaque en zamac - demontable.
Zamak-Platte - Zerlegbar.

MATERIALE - MATERIAL - MATIÉRE - MATERIAL

Tubo Ø 60 mm in acciaio o alluminio anodizzato.
Ø 60 mm steel or anodised aluminium tube.
Tube Ø 60 mm en acier ou aluminium anodisé.
Rohr Ø 60 mm aus Stahl oder eloxiertem Aluminium.

FINITURE - FINISHES - EXECUTIONS - AUSFUEHRUNGEN

Veniciatura epossidica tutti i colori.
Ottonato - Nickel satinato - Alluminio - Cromato o Alluminio rigato.
Epoxy painting every colour.
Brassed - Nickel satined - Aluminium - Chromed or Ridged aluminium.
Peinture Epoxide chaque couleur.
Laitonné - Nickel satiné - Aluminium - Chrome ou Aluminium dentelé.
Epoxy Lackierung jeder Farbe.
Vermessingt - Nickel satiniert - Aluminium - Verchromt oder Aluminium geriffelt.

ART. 251 R

Terminale regolabile max 3 cm.
Adjustable leg max 3 cm.
Pied reglable max 3 cm.
Verstellbaresbein max 3 cm.

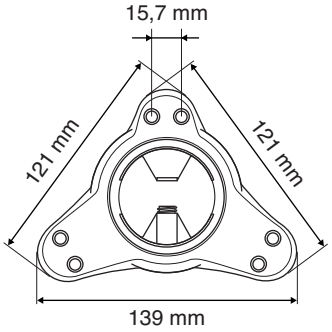

Piastra per gamba Ø 60 mm. - Plate for leg Ø 60 mm.
Plaque for pied de table Ø 60 mm. - Tischbeinplatte Ø 60 mm.

ART. 251 R OSCILLANTE

Terminale regolabile max 3 cm, oscillante.
Adjustable leg max 3 cm, swinging.
Pied reglable max 3 cm, à inclinaison réglable.
Verstellbaresbein max 3 cm, neigbar.

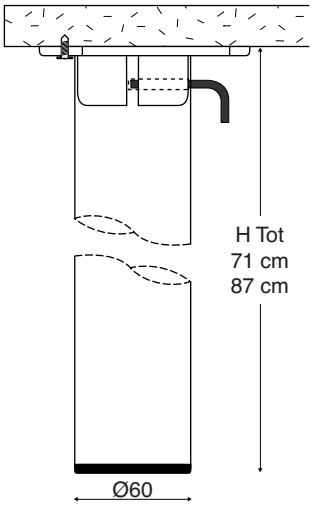

ART. 251 ROLLER

Gamba con ruota piroettante.
Leg with turning castor.
Pied avec virevolant route.
Drehbare-rolle Tischbeine.

ISTRUZIONI PER IL MONTAGGIO • *MOUNTING INSTRUCTIONS* • INSTRUCTIONS DE MONTAGE • *MONTAGEANWEISUNGEN*

Sistema di fissaggio a espansione rapido e sicuro, facile da montare, smontare e riporre in poco spazio.
Expansion system, quick and safe easy mounting and unscrewing space saving.
Systeme de fissage a expansion, vite et sur facile a monter et demonter, possibilite d'epargner d'espace.
Systeme auf Expansion, schnell und sicher einfach zu montieren und wieder zu iösen platzeinsparend.

1 POSIZIONARE LA PIASTRA SUL PIANO E FISSARLA CON LE APPOSITE VITI.

PUT THE PLATE ON THE TABLE AND FIX IT WITH THE AVAILABLE SCREWS.

POSITIONNER LA PLAQUE SUR LA TABLE ET VISSER LA MEME AVEC LES VIS SPECIALES.

POSITIONIEREN DIE BEFESTIGNGSPLATTE AUF DER TI-SCHPLATTE UND SCHRAUBEN MIT DEN SPEZIELL DAFÜR VORGESEHENEN SCHRAUBEN FEST.

2 INSERIRE LA GAMBA IN CORRISPONDENZA DEL FORO SULLA PIASTRA.

INSERT THE LEG IN CORRESPONDANCE WITH THE HOLE ON THE PLATE.

INTRODUIRE LE PIED EN CORRESPONDANCE AVEC LE TROU SUR LA PLAQUE.

STECKEN DIE TISCHBEIN NACH DEM LOCH ÜBER DIE PLATTE.

3 AVVITARE IL GRANO (VITE) NELLA PIASTRA FINO AL FISSAGGIO DELLA GAMBA.

TURN THE SCREW INTO THE PLATE UP TO FIX THE LEG.

TOURNER LA VIS DANS LA PLAQUE JUSQUE LA FIXAGE DE LE PIED.

DREHEN DIE SCHRAUBE IN DER PLATTE UM DIE BEINE ZU BEFESTIGEN.

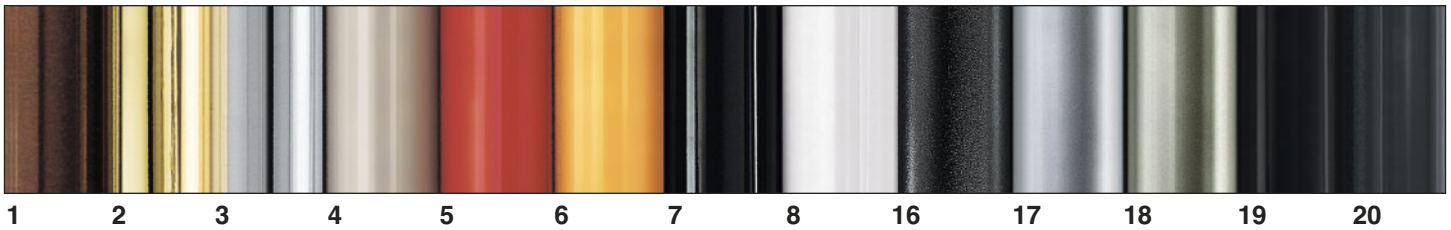

1	2	3	4	5	6	7	8	16	17	18	19	20
MARRONE BROWN MARRON BRAUN **RAL 8016**	OTTONATO BRASS PLATED LAITONNE VERMESSINGT	CROMATO CHROME PLATED CHROME VERCHROMT	GRIGIO GREY GRIS GRAU **RAL 7001**	ROSSO RED ROUGE ROT **RAL 3000**	GIALLO YELLOW JAUNE GELB	NERO LUCIDO GLOSSY BLACK NOIR BRILLANT SCHWARZ GLÄNZEND	BIANCO WHITE BLANC WEISS	NERO BUCCIATO ORANGE PEEL BLACK NOIR TEXTURÉ ORANGENSCHALE SCHWARZ	ALLUMINIO ALUMINIUM ALUMINIUM ALUMINIUM **RAL 9006**	NICKEL SATINATO NICKEL SATINED NICKEL SATINÉ NICKEL SATINIERT	NERO SEMIOPACO SEMI-OPAQUE BLACK NOIR SEMI-OPAQUE SCHWARZ HALBMATT	GRIGIO ANTRACITE ANTHRACITE GREY GRIS ANTHRACITE ANTHRAZITGRAU **RAL 7016**

21
ALLUMINIO **RAL 9006**
+ VERNICE TRASPARENTE
ALUMINIUM **RAL 9006**
+ TRANSPARENT ENAMEL
ALUMINIUM **RAL 9006**
+ PEINTURE TRANSPARENTE
ALUMINIUM **RAL 9006**
+ TRANSPARENTER LACK

22
ALLUMINIO BUCCIATO
RAL 9006
TEXTURED ALUMINIUM
RAL 9006
ALUMINIUM MOUCHETIS **RAL 9006**
ALUMINIUM **RAL 9006**
TUPFLACKIERT

23
METALLO GREZZO SATINATO
+ VERNICE TRASPARENTE
RAW SATINED METAL
+ TRANSPARENT ENAMEL
MÉTAL BRUT SATINÉ
+ PEINTURE TRANSPARENTE
ROHMETALL SATINIERT
+ TRANSPARENTER LACK

24
VERNICIATO TRASPARENTE
VARNISHED TRANSPARENT
VERNIS TRANSPARENT
TRANSPARENT LACKIERT

25
ACCIAIO INOX **AISI 304**
STAINLESS STEEL **AISI 304**
ACIER INOX **AISI 304**
EDELSTAHL **AISI 304**

26
ALLUMINIO RIGATO
RIDGED ALUMINIUM
ALUMINIUM DENTELÉ
ALUMINIUM GERIFFELT

CONFEZIONI STANDARD

cm. 71
Ø 60 cm
4 PEZZI/*4 PCS./4 PIECES/4 STÜCK*
cm.101 x 26 x 7 Kg. 7

cm. 87
Ø 60 cm.
1 PEZZO/*1 PC./1 PIECE/1 STÜCK*
cm.104 x 14 x 8 Kg. 2

MANART srl - 23876 MONTICELLO - FRAZ. CORTENUOVA (LC) ITALY - Via T. Moneta, 17 - Tel. 039.920.35.55 - 039.920.26.44 - Fax 039.920.28.01
www.manart.it e-mail: manart@manart.it

ART. 262

GAMBA PER TAVOLI
TABLE LEG
PIED DE TABLE
TISCHBEIN

ALTEZZA - HEIGHT - HAUTÊR - HÖHE

Standard 71 e 87 cm. Disponibile a richiesta per quantità.
Standard size 71 and 87 cm. Available for quantities on request.
Standard taille 71 et 87 cm. Disponible sur demande pour quantitè.
Standard Mass 71 und 87 cm. Fuer Mengen auf Ersuchen verfuegbar.

FISSAGGIO - FIXING - FIXAGE - FIXIERUNG

Piastra in zama - smontabile.
Zamak plate - detachable.
Plaque en zamac - demontable.
Zamak-Platte - Zerlegbar.

MATERIALE - MATERIAL - MATIÉRE - MATERIAL

Tubo Ø 80 mm in acciaio o alluminio anodizzato.
Ø 80 mm steel or anodised aluminium tube.
Tube Ø 80 mm en acier ou aluminium anodisé.
Rohr Ø 80 mm aus Stahl oder eloxiertem Aluminium.

FINITURE - FINISHES - EXECUTIONS - AUSFUEHRUNGEN

Verniciatura epossidica tutti i colori.
Ottonato - Nickel satinato - Alluminio - Cromato o Alluminio rigato.
Epoxy painting every colour.
Brassed - Nickel satined - Aluminium - Chromed or Ridged aluminium.
Peinture Epoxide chaque couleur.
Laitonné - Nickel satiné - Aluminium - Chrome ou Aluminium dentelé.
Epoxy Lackierung jeder Farbe.
Vermessingt - Nickel satiniert - Aluminium - Verchromt oder Aluminium geriffelt.

ART. 262 R

Terminale regolabile max 3 cm.
Adjustable leg max 3 cm.
Pied reglable max 3 cm.
Verstellbaresbein max 3 cm.

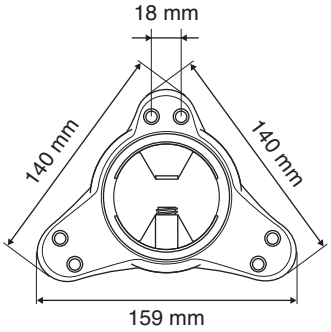

Piastra per gamba Ø 80 mm. - Plate for leg Ø 80 mm.
Plaque for pied de table Ø 80 mm. - Tischbeinplatte Ø 80 mm.

ART. 262 ROLLER

Gambe con ruota piroettante, dotata di freno di bloccaggio simultaneo sulla ruota e sull'asse piroettante.

Legs with turning castor, with simultaneous brake of blockade on the turning axis.

Pieds avec virevolant route, avec frein de bloccage simultané sur la route et sur l'axe virevolant.

Tischbeine mit drehbare-rolle, mit simultaner blockierungs bremse auf dem rad und der drehbaren achse.

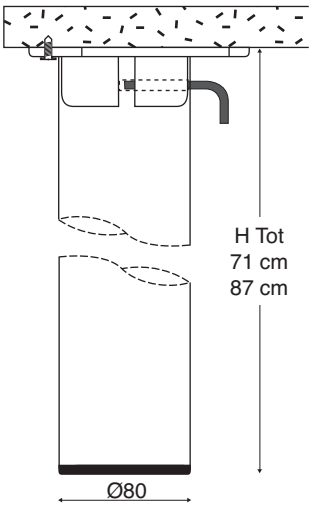

ISTRUZIONI PER IL MONTAGGIO • *MOUNTING INSTRUCTIONS* • INSTRUCTIONS DE MONTAGE • *MONTAGEANWEISUNGEN*

Sistema di fissaggio a espansione rapido e sicuro, facile da montare, smontare e riporre in poco spazio.
Expansion system, quick and safe easy mounting and unscrewing space saving.
Systeme de fissage a expansion, vite et sur facile a monter et demonter, possibilite d'epargner d'espace.
Systeme auf Expansion, schnell und sicher einfach zu montieren und wieder zu iösen platzeinsparend.

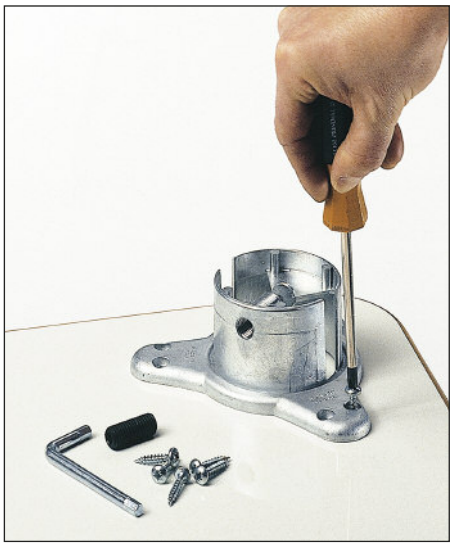

1 POSIZIONARE LA PIASTRA SUL PIANO E FISSARLA CON LE APPOSITE VITI.

PUT THE PLATE ON THE TABLE AND FIX IT WITH THE AVAILABLE SCREWS.

POSITIONNER LA PLAQUE SUR LA TABLE ET VISSER LA MEME AVEC LES VIS SPECIALES.

POSITIONIEREN DIE BEFESTIGNGSPLATTE AUF DER TI-SCHPLATTE UND SCHRAUBEN MIT DEN SPEZIELL DAFÜR VORGESEHENEN SCHRAUBEN FEST.

2 INSERIRE LA GAMBA IN CORRISPONDENZA DEL FORO SULLA PIASTRA.

INSERT THE LEG IN CORRESPONDANCE WITH THE HOLE ON THE PLATE.

INTRODUIRE LE PIED EN CORRESPONDANCE AVEC LE TROU SUR LA PLAQUE.

STECKEN DIE TISCHBEIN NACH DEM LOCH ÜBER DIE PLATTE.

3 AVVITARE IL GRANO (VITE) NELLA PIASTRA FINO AL FISSAGGIO DELLA GAMBA.

TURN THE SCREW INTO THE PLATE UP TO FIX THE LEG.

TOURNER LA VIS DANS LA PLAQUE JUSQUE LA FIXAGE DE LE PIED.

DREHEN DIE SCHRAUBE IN DER PLATTE UM DIE BEINE ZU BEFESTIGEN.

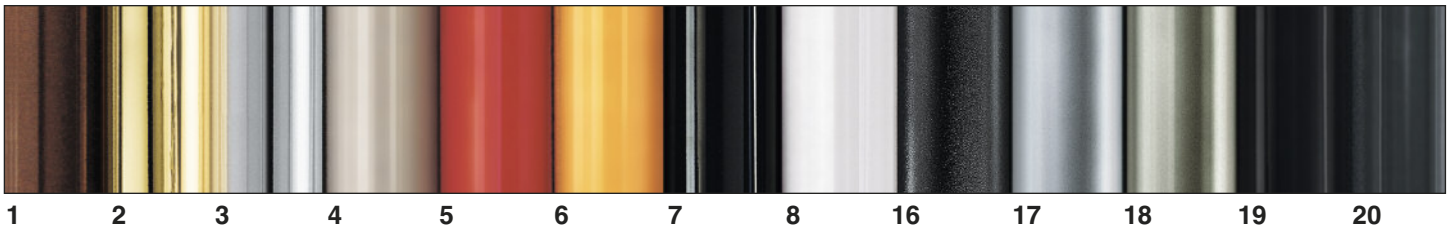

1	2	3	4	5	6	7	8	16	17	18	19	20
MARRONE BROWN MARRON BRAUN **RAL 8016**	OTTONATO BRASS PLATED LAITONNE VERMESSINGT	CROMATO CHROME PLATED CHROME VERCHROMT	GRIGIO GREY GRIS GRAU **RAL 7001**	ROSSO RED ROUGE ROT **RAL 3000**	GIALLO YELLOW JAUNE GELB	NERO LUCIDO GLOSSY BLACK NOIR BRILLANT SCHWARZ GLÄNZEND	BIANCO WHITE BLANC WEISS **RAL 9003**	NERO BUCCIATO ORANGE PEEL BLACK NOIR TEXTURÉ ORANGENSCHALE SCHWARZ	ALLUMINIO ALUMINIUM ALUMINIUM ALUMINIUM **RAL 9006**	NICKEL SATINATO NICKEL SATINED NICKEL SATINÉ NICKEL SATINIERT	NERO SEMIOPACO SEMI-OPAQUE BLACK NOIR SEMI-OPAQUE SCHWARZ HALBMATT	GRIGIO ANTRACITE ANTHRACITE GREY GRIS ANTHRACITE ANTHRAZITGRAU **RAL 7016**

21
ALLUMINIO **RAL 9006**
+ VERNICE TRASPARENTE
ALUMINIUM **RAL 9006**
+ TRANSPARENT ENAMEL
ALUMINIUM **RAL 9006**
+ PEINTURE TRANSPARENTE
ALUMINIUM **RAL 9006**
+ TRANSPARENTER LACK

22
ALLUMINIO BUCCIATO
RAL 9006
TEXTURED ALUMINIUM
RAL 9006
ALUMINIUM MOUCHETIS
RAL 9006
ALUMINIUM **RAL 9006**
TUPFLACKIERT

23
METALLO GREZZO SATINATO
+ VERNICE TRASPARENTE
RAW SATINED METAL
+ TRANSPARENT ENAMEL
MÉTAL BRUT SATINÉ
+ PEINTURE TRANSPARENTE
ROHMETALL SATINIERT
+ TRANSPARENTER LACK

24
VERNICIATO TRASPARENTE
VARNISHED TRANSPARENT
VERNIS TRANSPARENT
TRANSPARENT LACKIERT

26
ALLUMINIO RIGATO
RIDGED ALUMINIUM
ALUMINIUM DENTELÉ
ALUMINIUM GERIFFELT

CONFEZIONI STANDARD

cm. 71
Ø 80 cm
4 PEZZI/*4 PCS./4 PIECES/4 STÜCK*
cm.86 x 17 x 17 Kg. 9,5

cm. 87
Ø 80 cm.
1 PEZZO/*1 PC./1 PIECE/1 STÜCK*
cm.104 x 14 x 8,5 Kg. 3

MANART srl - 23876 MONTICELLO - FRAZ. CORTENUOVA (LC) ITALY - Via T. Moneta, 17 - Tel. 039.920.35.55 - 039.920.26.44 - Fax 039.920.28.01
www.manart.it e-mail: manart@manart.it

ART. 263

GAMBA PER TAVOLI
TABLE LEG
PIED DE TABLE
TISCHBEIN

ALTEZZA - HEIGHT - HAUTÊR - HÖHE

Standard 71 e 87 cm. Disponibile a richiesta per quantità.
Standard size 71 and 87 cm. Available for quantities on request.
Standard taille 71 et 87 cm. Disponible sur demande pour quantitè.
Standard Mass 71 und 87 cm. Fuer Mengen auf Ersuchen verfuegbar.

FISSAGGIO - FIXING - FIXAGE - FIXIERUNG

Piastra in allumino - smontabile.
Aluminium plate - detachable.
Aluminium plaque - demontable.
Aluminium Platte - Zerlegbar.

MATERIALE - MATERIAL - MATIÉRE - MATERIAL

Tubo 60x60 mm in acciaio.
Steel tube 60x60 mm.
Tube 60x60 mm en acier.
Stahlrohr 60x60 mm.

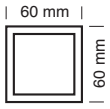

FINITURE - FINISHES - EXECUTIONS - AUSFUEHRUNGEN

Veniciatura epossidica tutti i colori.
Ottonato - Nickel satinato - Alluminio - Cromato.
Epoxy painting every colour.
Brassed - Nickel satined - Aluminium - Chromed.
Peinture Epoxide chaque couleur.
Laitonné - Nickel satiné - Aluminium - Chrome.
Epoxy Lackierung jeder Farbe.
Vermessingt - Nickel satiniert - Aluminium - Verchromt.

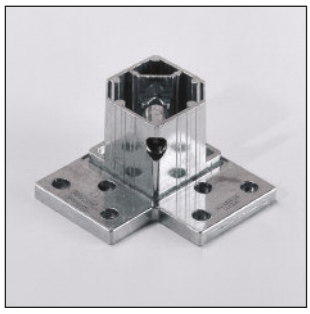

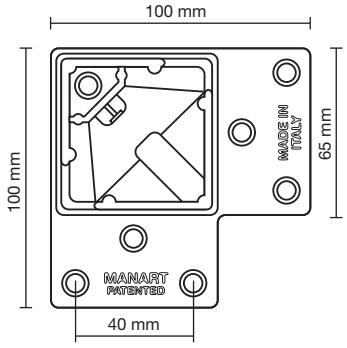

ART. 263 R

Terminale regolabile max 3 cm.
Adjustable leg max 3 cm.
Pied reglable max 3 cm.
Verstellbaresbein max 3 cm.

Piastra per gamba 60x60 mm. - Plate for leg 60x60 mm.
Plaque for pied de table 60x60 mm. - Tischbeinplatte 60x60 mm.

ISTRUZIONI PER IL MONTAGGIO • *MOUNTING INSTRUCTIONS* • INSTRUCTIONS DE MONTAGE • *MONTAGEANWEISUNGEN*

Sistema di fissaggio a espansione rapido e sicuro, facile da montare, smontare e riporre in poco spazio.
Expansion system, quick and safe easy mounting and unscrewing space saving.
Systeme de fissage a expansion, vite et sur facile a monter et demonter, possibilite d'epargner d'espace.
Systeme auf Expansion, schnell und sicher einfach zu montieren und wieder zu iösen platzeinsparend.

1 POSIZIONARE LA PIASTRA SUL PIANO E FISSARLA CON LE APPOSITE VITI.

PUT THE PLATE ON THE TABLE AND FIX IT WITH THE AVAILABLE SCREWS.

POSITIONNER LA PLAQUE SUR LA TABLE ET VISSER LA MEME AVEC LES VIS SPECIALES.

POSITIONIEREN DIE BEFESTIGNGSPLATTE AUF DER TI-SCHPLATTE UND SCHRAUBEN MIT DEN SPEZIELL DAFÜR VORGESEHENEN SCHRAUBEN FEST.

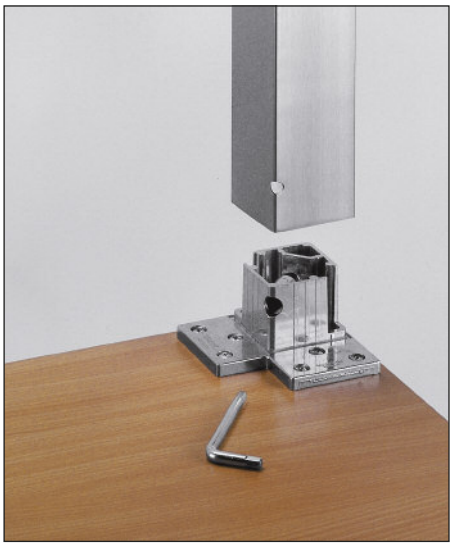

2 INSERIRE LA GAMBA IN CORRISPONDENZA DEL FORO SULLA PIASTRA.

INSERT THE LEG IN CORRESPONDANCE WITH THE HOLE ON THE PLATE.

INTRODUIRE LE PIED EN CORRESPONDANCE AVEC LE TROU SUR LA PLAQUE.

STECKEN DIE TISCHBEIN NACH DEM LOCH ÜBER DIE PLATTE.

3 AVVITARE IL GRANO (VITE) NELLA PIASTRA FINO AL FISSAGGIO DELLA GAMBA.

TURN THE SCREW INTO THE PLATE UP TO FIX THE LEG.

TOURNER LA VIS DANS LA PLAQUE JUSQUE LA FIXAGE DE LE PIED.

DREHEN DIE SCHRAUBE IN DER PLATTE UM DIE BEINE ZU BEFESTIGEN.

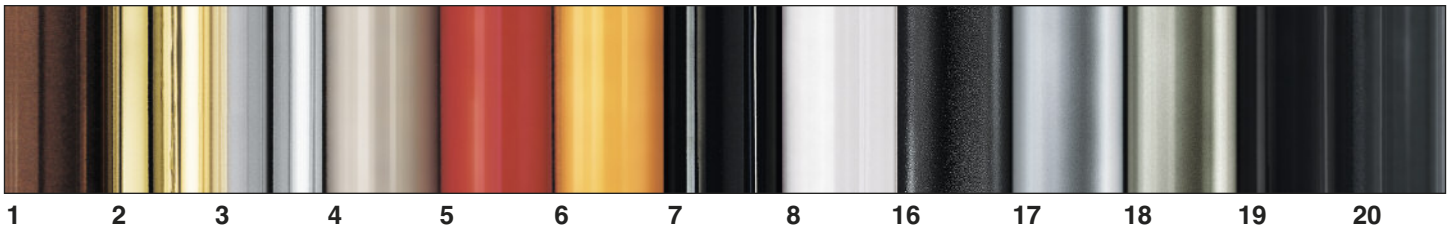

1	2	3	4	5	6	7	8	16	17	18	19	20
MARRONE BROWN MARRON BRAUN **RAL 8016**	OTTONATO BRASS PLATED LAITONNE VERMESSINGT	CROMATO CHROME PLATED CHROME VERCHROMT	GRIGIO GREY GRIS GRAU **RAL 7001**	ROSSO RED ROUGE ROT **RAL 3000**	GIALLO YELLOW JAUNE GELB	NERO LUCIDO GLOSSY BLACK NOIR BRILLANT SCHWARZ GLÄNZEND	BIANCO WHITE BLANC WEISS **RAL 9003**	NERO BUCCIATO ORANGE PEEL BLACK NOIR TEXTURÉ ORANGENSCHALE SCHWARZ	ALLUMINIO ALUMINIUM ALUMINIUM ALUMINIUM **RAL 9006**	NICKEL SATINATO NICKEL SATINED NICKEL SATINÉ NICKEL SATINIERT	NERO SEMIOPACO SEMI-OPAQUE BLACK NOIR SEMI-OPAQUE SCHWARZ HALBMATT	GRIGIO ANTRACITE ANTHRACITE GREY GRIS ANTHRACITE ANTHRAZITGRAU **RAL 7016**

21
ALLUMINIO **RAL 9006**
+ VERNICE TRASPARENTE
ALUMINIUM **RAL 9006**
+ TRANSPARENT ENAMEL
ALUMINIUM **RAL 9006**
+ PEINTURE TRANSPARENTE
ALUMINIUM **RAL 9006**
+ TRANSPARENTER LACK

22
ALLUMINIO BUCCIATO
RAL 9006
TEXTURED ALUMINIUM
RAL 9006
ALUMINIUM MOUCHETIS **RAL 9006**
ALUMINIUM **RAL 9006**
TUPFLACKIERT

23
METALLO GREZZO SATINATO
+ VERNICE TRASPARENTE
RAW SATINED METAL
+ TRANSPARENT ENAMEL
MÉTAL BRUT SATINÉ
+ PEINTURE TRANSPARENTE
ROHMETALL SATINIERT
+ TRANSPARENTER LACK

24
VERNICIATO TRASPARENTE
VARNISHED TRANSPARENT
VERNIS TRANSPARENT
TRANSPARENT LACKIERT

26
ALLUMINIO RIGATO
RIDGED ALUMINIUM
ALUMINIUM DENTELÉ
ALUMINIUM GERIFFELT

CONFEZIONI STANDARD

cm. 71
60x60 mm
4 PEZZI/*4 PCS./4 PIECES/4 STÜCK*
cm. 88 x 26 x 7 Kg. 7,8

cm. 87
60x60 mm
1 PEZZO/*1 PC./1 PIECE/1 STÜCK*
cm. 104 x 14 x 8 Kg. 2,5

MANART srl - 23876 MONTICELLO - FRAZ. CORTENUOVA (LC) ITALY - Via T. Moneta, 17 - Tel. 039.920.35.55 - 039.920.26.44 - Fax 039.920.28.01
www.manart.it e-mail: manart@manart.it

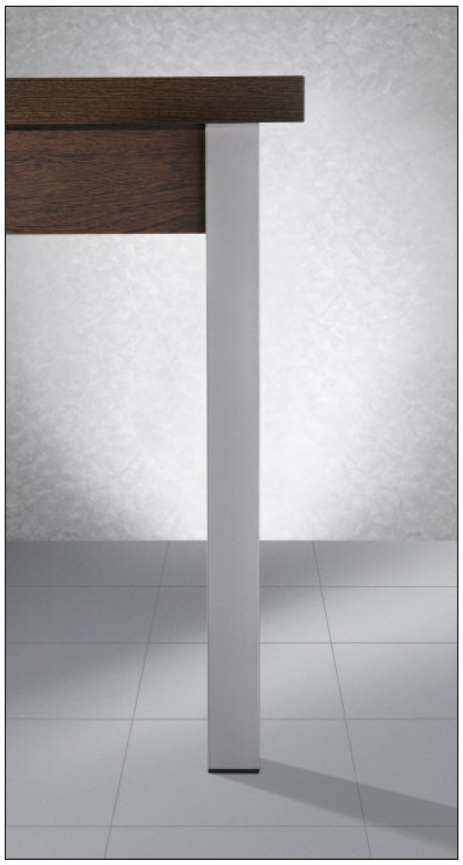

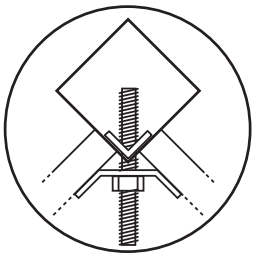

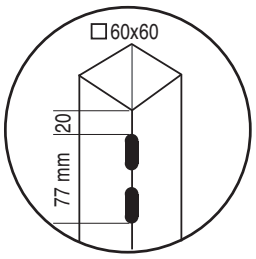

ART. 252

GAMBA PER TAVOLI
TABLE LEG
PIED DE TABLE
TISCHBEIN

ALTEZZA - HEIGHT - HAUTÊR - HÖHE

Standard 75 cm. Terminale fisso. Terminale regolabile disponibile su richiesta per quantità.
Standard size 75 cm. Fixed Leg. Adjustable terminal unit available upon request in quantity.
Standard taille 75 cm. Pied fixe. Embout terminal réglable sur demande et selon la quantité disponible.
Standard Mass 75 cm. Festes Bein. Einstellbares Endstück, lieferbar auf Anfrage nach Stückzahl.

FISSAGGIO - FIXING - FIXAGE - FIXIERUNG

Con perni regolabili (8MA x 90 mm) - spacco standard 12 cm.
With adjustable pins (8MA x 90 mm) - standard cutting 12 cm.
Avec pivots réglable (8MA x 90 mm) - fente standard 12 cm.
Mit einstellbaren Stiften (8MA x 90 mm) - Riss standard von 12 cm.

MATERIALE - MATERIAL - MATIÉRE - MATERIAL

Tubo 60x60 mm in acciaio. / Steel tube 60x60 mm.
Tube 60x60 mm en acier. / Stahlrohr 60x60 mm.

FINITURE - FINISHES - EXECUTIONS - AUSFUEHAUNGEN

Verniciatura epossidica tutti i colori.
Ottonato - Nickel satinato - Alluminio - Cromato.
Epoxy painting every colour.
Brassed - Nickel satined - Aluminium - Chromed.
Peinture Epoxide chaque couleur.
Laitonné - Nickel satiné - Aluminium - Chrome.
Epoxy Lackierung jeder Farbe.
Vermessingt - Nickel satiniert - Aluminium - Verchromt.

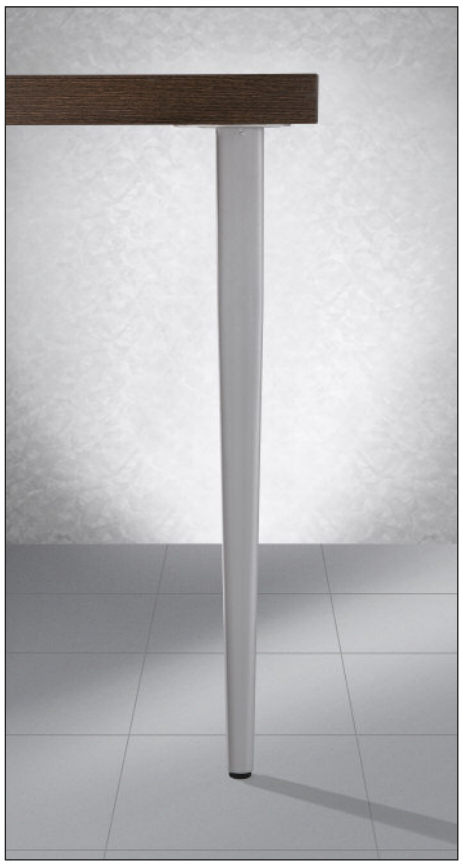

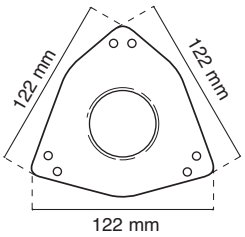

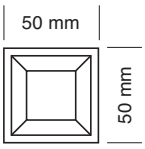

ART. 254

GAMBA PER TAVOLI
CONIFICATA
CONICAL TABLE LEG
PIED DE TABLE CONIQUE
KONISCHE TISCHBEIN

ALTEZZA - HEIGHT - HAUTÊR - HÖHE

Standard cm 71. Terminale regolabile. Disponibile a richiesta per quantità.
Standard size cm 71. Adjustable leg. Available for quantities on request.
Standard taille cm 71. Pied reglabel. Disponible sur demande pour quantitè.
Standard Mass cm 71. Verstellbaresbein. Fuer Mangen auf Ersuchen verfuebar.

FISSAGGIO - FIXING - FIXAGE - FIXIERUNG

Piastra triangolare 122x122x122 mm. - saldata.
Triangular plate 122x122x122 mm. - welded.
Plaque triangulaire 122x122x122 mm. - soudée.
Dreieckige Platte 122x122x122 mm. - geschweisst.

MATERIALE - MATERIAL - MATIÉRE - MATERIAL

Tubo 50x50 mm in acciaio.
Steel tube 50x50 mm.
Tube 50x50 mm en acier.
Stahlrohr 50x50 mm.

FINITURE - FINISHES - EXECUTIONS - AUSFUEHRUNGEN

Verniciatura epossidica tutti i colori.
Ottonato - Nickel satinato - Alluminio - Cromato.
Epoxy painting every colour.
Brassed - Nickel satined - Aluminium - Chromed.
Peinture Epoxide chaque couleur.
Laitonné - Nickel satiné - Aluminium - Chrome.
Epoxy Lackierung jeder Farbe.
Vermessingt - Nickel satiniert - Aluminium - Verchromt.

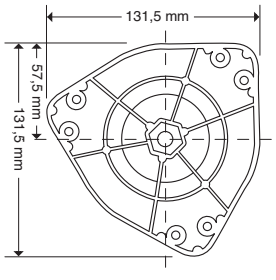

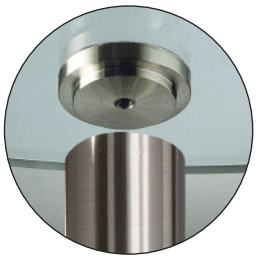

ART. 259

GAMBA PER TAVOLI
CONIFICATA
CONICAL TABLE LEG
PIED DE TABLE CONIQUE
KONISCHE TISCHBEIN

ALTEZZA - HEIGHT - HAUTÊR - HÖHE

Standard 71 cm. Terminale regolabile max 1 cm.
Standard size 71 cm. Adjustable leg max 1 cm.
Standard taille 71 cm. Pied reglable max 1 cm.
Standard Mass 71 cm. Verstellbaresbein max 1 cm.

FISSAGGIO - FIXING - FIXAGE - FIXIERUNG

Piastra alluminio, smontabile. Aluminium plate, detachable.
Aluminium plaque, demontable. Aluminium Platte, Zerlegbares.

MATERIALE - MATERIAL - MATIÉRE - MATERIAL

Tubo Ø 60 mm in acciaio.
Steel tube Ø 60 mm.
Tube Ø 60 mm en acier.
Stahlrohr Ø 60 mm.

FINITURE - FINISHES - EXECUTIONS - AUSFUEHRUNGEN

Verniciatura epossidica tutti i colori.
Ottonato - Nickel satinato - Alluminio - Cromato.
Epoxy painting every colour.
Brassed - Nickel satined - Aluminium - Chromed.
Peinture Epoxide chaque couleur.
Laitonné - Nickel satiné - Aluminium - Chrome.
Epoxy Lackierung jeder Farbe.
Vermessingt - Nickel satiniert - Aluminium - Verchromt.

ART. 259 GLASS

FISSAGGIO - FIXING - FIXAGE - FIXIERUNG

Con piastra in acciaio inox per applicazione su vetro e cristallo.
With inox steel plate for application on glass and crystal.
Avec plaque en acier pour l'application sur verre et cristal.
Mit inox Sthalplatte fuer die Anwendung auf Glas und Kristall.

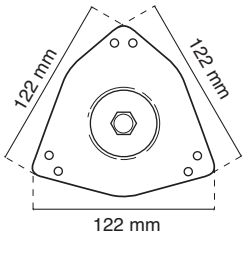

ART. 264

GAMBA PER TAVOLI
TABLE LEG
PIED DE TABLE
TISCHBEIN

ALTEZZA - HEIGHT - HAUTÊR - HÖHE

Standard cm 71. Terminale regolabile. Disponibile a richiesta per quantità.
Standard size cm 71. Adjustable leg. Available for quantities on request.
Standard taille cm 71. Pied reglabel. Disponible sur demande pour quantitè.
Standard Mass cm 71. Verstellbaresbein. Fuer Mangen auf Ersuchen verfuebar.

FISSAGGIO - FIXING - FIXAGE - FIXIERUNG

Piastra in acciaio 122x122x122 mm, smontabile
Steel plate 122x122x122 mm, detachable
Plaque en acier 122x122x122 mm, demontable
Stahl-Platte 122x122x122 mm, Zerlegbares

MATERIALE - MATERIAL - MATIÉRE - MATERIAL

Tubo Ø 50 mm in acciaio.
Steel tube Ø 50 mm.
Tube Ø 50 mm en acier.
Stahlrohr Ø 50 mm.

FINITURE - FINISHES - EXECUTIONS - AUSFUEHRUNGEN

Verniciatura epossidica tutti i colori.
Ottonato - Nickel satinato - Alluminio - Cromato.
Epoxy painting every colour.
Brassed - Nickel satined - Aluminium - Chromed.
Peinture Epoxide chaque couleur.
Laitonné - Nickel satiné - Aluminium - Chrome.
Epoxy Lackierung jeder Farbe.
Vermessingt - Nickel satiniert - Aluminium - Verchromt.

MANART srl - 23876 MONTICELLO - FRAZ. CORTENUOVA (LC) ITALY - Via T. Moneta, 17 - Tel. 039.920.35.55 - 039.920.26.44 - Fax 039.920.28.01
www.manart.it e-mail: manart@manart.it

ART. 265

GAMBA PER TAVOLI
ALLUNGABILE
EXTENSIBLE TABLE LEG
PIED DE TABLE EXTENSIBLE
VERLAENGERBAR TISCHBEIN

ALTEZZA - HEIGHT - HAUTÊR - HÖHE

Standard: cm. 69 chiusa, allungabile fino a 87 cm
cm. 90 chiusa, allungabile fino a 110 cm.
Standard size 69 cm. extensible to 87 cm
90 cm. extensible to 110 cm.
Standard taille cm. 69 en position fermée alongeable jusqu'à 87 cm
cm. 90 en position fermée alongeable jusqu'à 110 cm.
Standard Mass cm. 69, geschlossen, ausziehbar bis zu 87 cm
cm. 90, geschlossen, ausziehbar bis zu 110 cm.

FISSAGGIO - FIXING - FIXAGE - FIXIERUNG

Piastra in acciaio 100x100 mm - saldata.
Steel plate 100x100 mm - welded.
Plaque en acier 100x100 mm - soudée.
Stahl-Platte 100x100 mm - geschweisst.

MATERIALE - MATERIAL - MATIÉRE - MATERIAL

Tubo 80x80 mm in acciaio. / Steel tube 80x80 mm.
Tube 80x80 mm en acier. / Stahlrohr 80x80 mm.

FINITURE - FINISHES - EXECUTIONS - AUSFUEHRUNGEN

Verniciatura epossidica tutti i colori.
Ottonato - Nickel satinato - Alluminio - Cromato.
Epoxy painting every colour.
Brassed - Nickel satined - Aluminium - Chromed.
Peinture Epoxide chaque couleur.
Laitonné - Nickel satiné - Aluminium - Chrome.
Epoxy Lackierung jeder Farbe.
Vermessingt - Nickel satiniert - Aluminium - Verchromt.

ART. 267

GAMBA PER TAVOLI
TABLE LEG
PIED DE TABLE
TISCHBEIN

ALTEZZA - HEIGHT - HAUTÊR - HÖHE

Standard 71 cm. Terminale fisso.
Standard size 71 cm. Fixed Leg.
Standard taille 71 cm. Pied fixe.
Standard Mass 71 cm. Festes Bein.

MATERIALE - MATERIAL - MATIÉRE - MATERIAL

Lamiera piegata 160x160 mm sp. 2 mm.
Bent sheet metal, 160x160 mm th. 2 mm.
Tôle pliée 160 x 160 mm. ép. 2 mm.
gebogenes Blech 160x160 mm, Stärke 2 mm.

FINITURE - FINISHES - EXECUTIONS - AUSFUEHAUNGEN

Verniciatura epossidica tutti i colori.
Epoxy painting every colour.
Peinture Epoxide chaque couleur.
Epoxy Lackierung jeder Farbe.

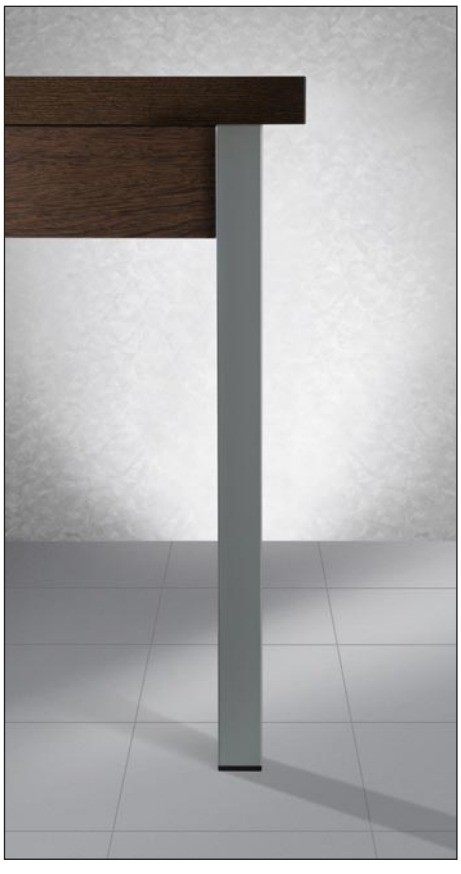

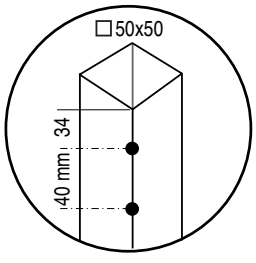

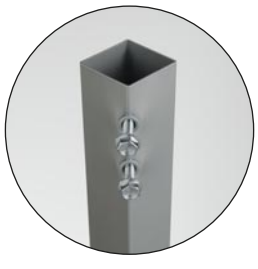

ART. 268

GAMBA PER TAVOLI
TABLE LEG
PIED DE TABLE
TISCHBEIN

ALTEZZA - HEIGHT - HAUTÊR - HÖHE

Standard 75 cm. Terminale fisso.
Terminale regolabile disponibile su richiesta per quantità.
Standard size 75 cm. Fixed Leg.
Adjustable terminal unit available upon request in quantity.
Standard taille 75 cm. Pied fixe.
Embout terminal réglable sur demande et selon la quantité disponible.
Standard Mass 75 cm. Festes Bein.
Einstellbares Endstück, lieferbar auf Anfrage nach Stückzahl.

FISSAGGIO - FIXING - FIXAGE - FIXIERUNG

Con viti 8MA x 30 mm.
With screws 8MA x 30 mm.
Vis d'assemblage 8MA x 30 mm.
Mit Schrauben 8MA x 30 mm.

MATERIALE - MATERIAL - MATIÉRE - MATERIAL

Tubo 50x50 mm in acciaio. / Steel tube 50x50 mm.
Tube 50x50 mm en acier. / Stahlrohr 50x50 mm.

FINITURE - FINISHES - EXECUTIONS - AUSFUEHRUNGEN

Verniciatura epossidica tutti i colori.
Ottonato - Nickel satinato - Alluminio - Cromato.
Epoxy painting every colour.
Brassed - Nickel satined - Aluminium - Chromed.
Peinture Epoxide chaque couleur.
Laitonné - Nickel satiné - Aluminium - Chrome.
Epoxy Lackierung jeder Farbe.
Vermessingt - Nickel satiniert - Aluminium - Verchromt.

ART. 269

GAMBA PER TAVOLI
TABLE LEG
PIED DE TABLE
TISCHBEIN

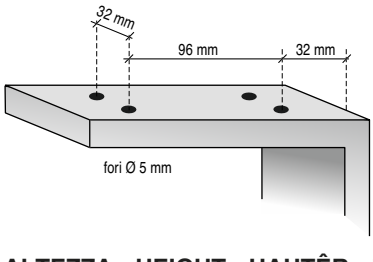

ALTEZZA - HEIGHT - HAUTÊR - HÖHE

Standard 71 cm. Terminale regolabile. Disponibile a richiesta per quantità.
Standard size 71 cm. Adjustable leg. Available for quantities on request.
Standard taille 71 cm. Pied reglable. Disponible sur demande pour quantitè.
Standard Mass 71 cm. Verstellbares Bein. Fuer Mengen auf Ersuchen verfuegbar.

MATERIALE - MATERIAL - MATIÉRE - MATERIAL

Tubo 60x20 mm. in acciaio. / Steel tube 60x20 mm.
Tube 60x20 mm. en acier. / Stahlrohr 60x20 mm.

FINITURE - FINISHES - EXECUTIONS - AUSFUEHAUNGEN

Verniciatura epossidica tutti i colori.
Nickel satinato - Alluminio - Cromato.
Epoxy painting every colour.
Nickel satined - Aluminium - Chromed.
Peinture Epoxide chaque couleur.
Nickel satiné - Aluminium - Chrome.
Epoxy Lackierung jeder Farbe.
Nickel satiniert - Aluminium - Verchromt.

MANART srl - 23876 MONTICELLO - FRAZ. CORTENUOVA (LC) ITALY - Via T. Moneta, 17 - Tel. 039.920.35.55 - 039.920.26.44 - Fax 039.920.28.01
www.manart.it e-mail: manart@manart.it

ART. 266

GAMBA PER TAVOLI
TABLE LEG
PIED DE TABLE
TISCHBEIN

ALTEZZA - HEIGHT - HAUTÊR - HÖHE

Altezza/height/hautêr/höhe	Larghezza/width/largeur/Breite
cm 71	cm 70 - 80 - 90
cm 87	cm 70 - 80 - 90

MATERIALE - MATERIAL - MATIÉRE - MATERIAL

Tubo 60x20 mm. in acciaio.
Steel tube 60x20 mm.
Tube 60x20 mm. en acier.
Stahlrohr 60x20 mm.

FINITURE - FINISHES - EXECUTIONS - AUSFUEHAUNGEN

Verniciatura epossidica tutti i colori.
Nickel satinato - Alluminio - Cromato.
Epoxy painting every colour.
Nickel satined - Aluminium - Chromed.
Peinture Epoxide chaque couleur.
Nickel satiné - Aluminium - Chrome.
Epoxy Lackierung jeder Farbe.
Nickel satiniert - Aluminium - Verchromt.

ART. 270

GAMBA PER TAVOLI
TABLE LEG
PIED DE TABLE
TISCHBEIN

ALTEZZA - HEIGHT - HAUTÊR - HÖHE

Altezza/height/hautêr/höhe	Larghezza/width/largeur/Breite
cm 71	cm 70 - 80 - 90
cm 87	cm 70 - 80 - 90

MATERIALE - MATERIAL - MATIÉRE - MATERIAL

Tubo triangolare 88x64x64 mm. in acciaio.
Triangular steel tube rod 88x64x64 mm.
Tube triangulaire 88x64x64 mm. en acier.
Dreieckiges Stahlrohr 88x64x64 mm.

FINITURE - FINISHES - EXECUTIONS - AUSFUEHAUNGEN

Verniciatura epossidica tutti i colori.
Nickel satinato - Alluminio - Cromato.
Epoxy painting every colour.
Nickel satined - Aluminium - Chromed.
Peinture Epoxide chaque couleur.
Nickel satiné - Aluminium - Chrome.
Epoxy Lackierung jeder Farbe.
Nickel satiniert - Aluminium - Verchromt.

MANART srl - 23876 MONTICELLO - FRAZ. CORTENUOVA (LC) ITALY - Via T. Moneta, 17 - Tel. 039.920.35.55 - 039.920.26.44 - Fax 039.920.28.01
www.manart.it e-mail: manart@manart.it

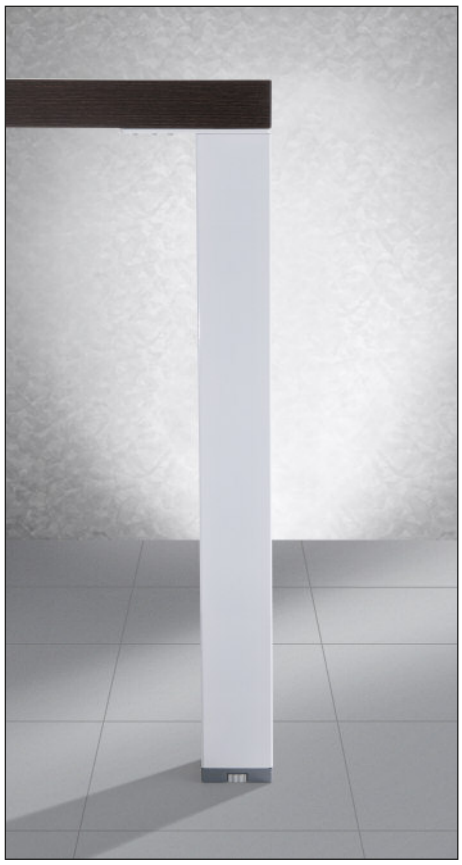

ART. 271

GAMBA PER TAVOLI
TABLE LEG
PIED DE TABLE
TISCHBEIN

ALTEZZA - HEIGHT - HAUTÊR - HÖHE

Standard 71 cm. Terminale regolabile. Disponibile a richiesta per quantità.
Standard size 71 cm. Adjustable leg. Available for quantities on request.
Standard taille 71 cm. Pied reglable. Disponible sur demande pour quantitè.
Standard Mass 71 cm. Verstellbares Bein. Fuer Mengen auf Ersuchen verfuegbar.

FISSAGGIO - FIXING - FIXAGE - FIXIERUNG

Piastra triangolare in acciaio 163x163x220 mm, smontabile
Steel triangular plate 163x163x220 mm, detachable.
Plaque triangulaire en acier 163x163x220 mm, demontable.
Dreieckige inox Sthalplatte 163x163x220 mm, Zerlegbares.

MATERIALE - MATERIAL - MATIÉRE - MATERIAL

Tubo 80x80 mm in acciaio. / Steel tube 80x80 mm.
Tube 80x80 mm en acier. / Stahlrohr 80x80 mm.

FINITURE - FINISHES - EXECUTIONS - AUSFUEHRUNGEN

Verniciatura epossidica tutti i colori.
Ottonato - Nickel satinato - Alluminio - Cromato.
Epoxy painting every colour.
Brassed - Nickel satined - Aluminium - Chromed.
Peinture Epoxide chaque couleur.
Laitonné - Nickel satiné - Aluminium - Chrome.
Epoxy Lackierung jeder Farbe.
Vermessingt - Nickel satiniert - Aluminium - Verchromt.

ART. 271 R

Terminale regolabile max 1 cm.
Adjustable leg max 1 cm.
Pied reglable max 1 cm.
Verstellbaresbein max 1 cm.

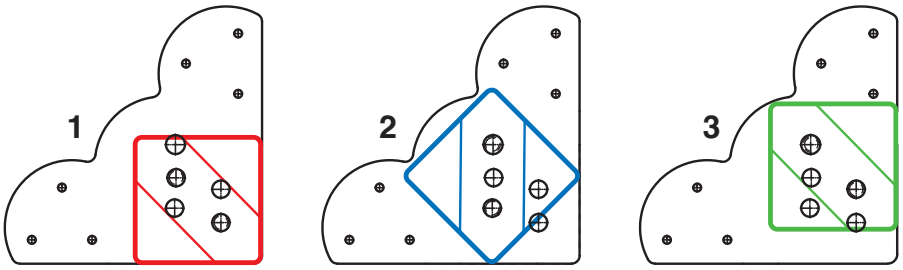

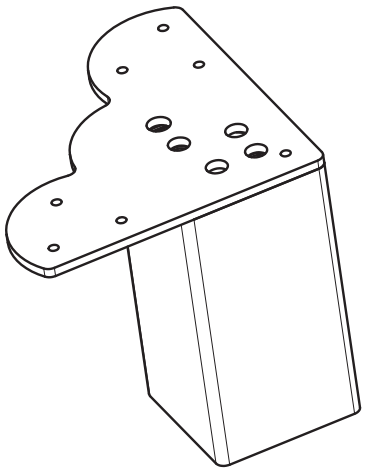

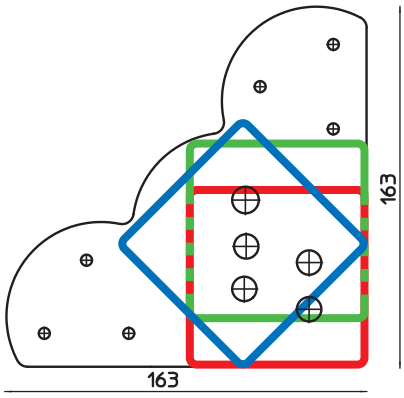

ART. 272

GAMBA PER TAVOLI
TABLE LEG
PIED DE TABLE
TISCHBEIN

ALTEZZA - HEIGHT - HAUTÊR - HÖHE

Standard 71 cm. Terminale regolabile. Disponibile a richiesta per quantità.
Standard size 71 cm. Adjustable leg. Available for quantities on request.
Standard taille 71 cm. Pied reglable. Disponible sur demande pour quantitè.
Standard Mass 71 cm. Verstellbares Bein. Fuer Mengen auf Ersuchen verfuegbar.

FISSAGGIO - FIXING - FIXAGE - FIXIERUNG

Piastra triangolare in acciaio 121x121x160 mm, smontabile.
Steel triangular plate 121x121x160 mm, detachable.
Plaque triangulaire en acier 121x121x160 mm, demontable.
Dreieckige Sthal-platte 121x121x160 mm, Zerlegbare.

MATERIALE - MATERIAL - MATIÉRE - MATERIAL

Tubo triangolare 64x64x88 mm in acciaio.
Steel triangular tube 64x64x88 mm.
Tube triangulaire 64x64x88 mm en acier.
Dreieckige Stahlrohr 64x64x88 mm.

FINITURE - FINISHES - EXECUTIONS - AUSFUEHAUNGEN

Verniciatura epossidica tutti i colori.
Ottonato - Nickel satinato - Alluminio - Cromato.
Epoxy painting every colour.
Brassed - Nickel satined - Aluminium - Chromed.
Peinture Epoxide chaque couleur.
Laitonné - Nickel satiné - Aluminium - Chrome.
Epoxy Lackierung jeder Farbe.
Vermessingt - Nickel satiniert - Aluminium - Verchromt.

ART. 272 R

Terminale regolabile max 1 cm.
Adjustable leg max 1 cm.
Pied reglable max 1 cm.
Verstellbaresbein max 1 cm.

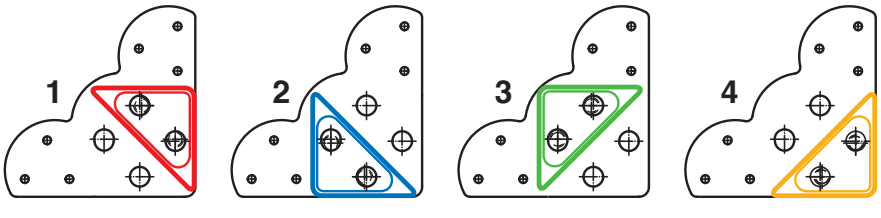

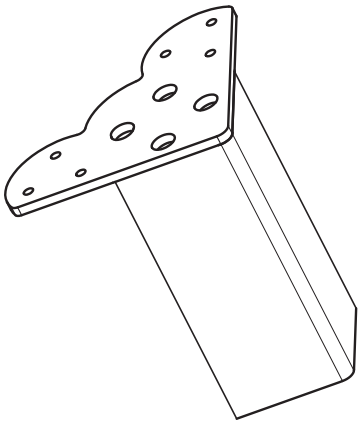

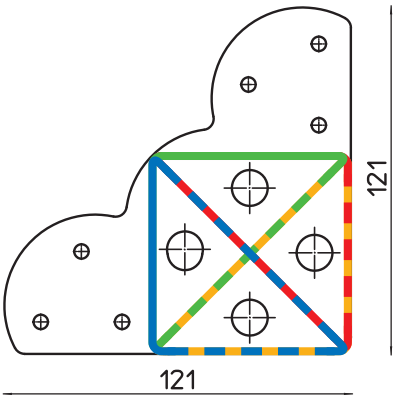

MANART srl - 23876 MONTICELLO - FRAZ. CORTENUOVA (LC) ITALY - Via T. Moneta, 17 - Tel. 039.920.35.55 - 039.920.26.44 - Fax 039.920.28.01
www.manart.it e-mail: manart@manart.it

ART. 273

GAMBA PER TAVOLI
TABLE LEG
PIED DE TABLE
TISCHBEIN

ALTEZZA - HEIGHT - HAUTÊR - HÖHE

Altezza/height/hautêr/höhe	Larghezza/width/largeur/Breite
cm 71	cm 70
cm 87	cm 70

MATERIALE - MATERIAL - MATIÉRE - MATERIAL

Tubo 60x20 mm. in acciaio.
Steel tube 60x20 mm.
Tube 60x20 mm. en acier.
Stahlrohr 60x20 mm.

FINITURE - FINISHES - EXECUTIONS - AUSFUEHAUNGEN

Verniciatura epossidica tutti i colori.
Nickel satinato - Alluminio - Cromato.
Epoxy painting every colour.
Nickel satined - Aluminium - Chromed.
Peinture Epoxide chaque couleur.
Nickel satiné - Aluminium - Chrome.
Epoxy Lackierung jeder Farbe.
Nickel satiniert - Aluminium - Verchromt.

ART. 276

GAMBA PER TAVOLI
TABLE LEG
PIED DE TABLE
TISCHBEIN

ALTEZZA - HEIGHT - HAUTÊR - HÖHE

Altezza/height/hautêr/höhe	Larghezza/width/largeur/Breite
cm 71	cm 70 - 80 - 90
cm 87	cm 70 - 80 - 90

MATERIALE - MATERIAL - MATIÉRE - MATERIAL

Tubo 60x20 mm. in acciaio.
Steel tube 60x20 mm.
Tube 60x20 mm. en acier.
Stahlrohr 60x20 mm.

FINITURE - FINISHES - EXECUTIONS - AUSFUEHAUNGEN

Verniciatura epossidica tutti i colori.
Nickel satinato - Alluminio - Cromato.
Epoxy painting every colour.
Nickel satined - Aluminium - Chromed.
Peinture Epoxide chaque couleur.
Nickel satiné - Aluminium - Chrome.
Epoxy Lackierung jeder Farbe.
Nickel satiniert - Aluminium - Verchromt.

ART. 277

GAMBA PER TAVOLI
TABLE LEG
PIED DE TABLE
TISCHBEIN

ALTEZZA - HEIGHT - HAUTÊR - HÖHE

Altezza/height/hautêr/höhe	Larghezza/width/largeur/Breite
cm 71	cm 70 - 80 - 90
cm 87	cm 70 - 80 - 90

MATERIALE - MATERIAL - MATIÉRE - MATERIAL

Tubo 60x20 mm. in acciaio.
Steel tube 60x20 mm.
Tube 60x20 mm. en acier.
Stahlrohr 60x20 mm.

FINITURE - FINISHES - EXECUTIONS - AUSFUEHAUNGEN

Verniciatura epossidica tutti i colori.
Nickel satinato - Alluminio - Cromato.
Epoxy painting every colour.
Nickel satined - Aluminium - Chromed.
Peinture Epoxide chaque couleur.
Nickel satiné - Aluminium - Chrome.
Epoxy Lackierung jeder Farbe.
Nickel satiniert - Aluminium - Verchromt.

MANART srl - 23876 MONTICELLO - FRAZ. CORTENUOVA (LC) ITALY - Via T. Moneta, 17 - Tel. 039.920.35.55 - 039.920.26.44 - Fax 039.920.28.01
www.manart.it e-mail: manart@manart.it

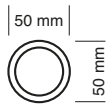

ART. 274R

GAMBA PER TAVOLI
TABLE LEG
PIED DE TABLE
TISCHBEIN

ALTEZZA - HEIGHT - HAUTÊR - HÖHE

Standard cm 71. Terminale regolabile. Disponibile a richiesta per quantità.
Standard size cm 71. Adjustable leg. Available for quantities on request.
Standard taille cm 71. Pied reglabel. Disponible sur demande pour quantitè.
Standard Mass cm 71. Verstellbaresbein. Fuer Mangen auf Ersuchen verfuebar.

FISSAGGIO - FIXING - FIXAGE - FIXIERUNG

Piastra in acciaio 100x100 mm - saldata.
Steel plate 100x100 mm - welded.
Plaque en acier 100x100 mm - soudée.
Stahl-Platte 100x100 mm - geschweisst.

MATERIALE - MATERIAL - MATIÉRE - MATERIAL

Tubo Ø 50 mm in acciaio.
Steel tube Ø 50 mm.
Tube Ø 50 mm en acier.
Stahlrohr Ø 50 mm.

FINITURE - FINISHES - EXECUTIONS - AUSFUEHRUNGEN

Verniciatura epossidica tutti i colori.
Ottonato - Nickel satinato - Alluminio - Cromato.
Epoxy painting every colour.
Brassed - Nickel satined - Aluminium - Chromed.
Peinture Epoxide chaque couleur.
Laitonné - Nickel satiné - Aluminium - Chrome.
Epoxy Lackierung jeder Farbe.
Vermessingt - Nickel satiniert - Aluminium - Verchromt.

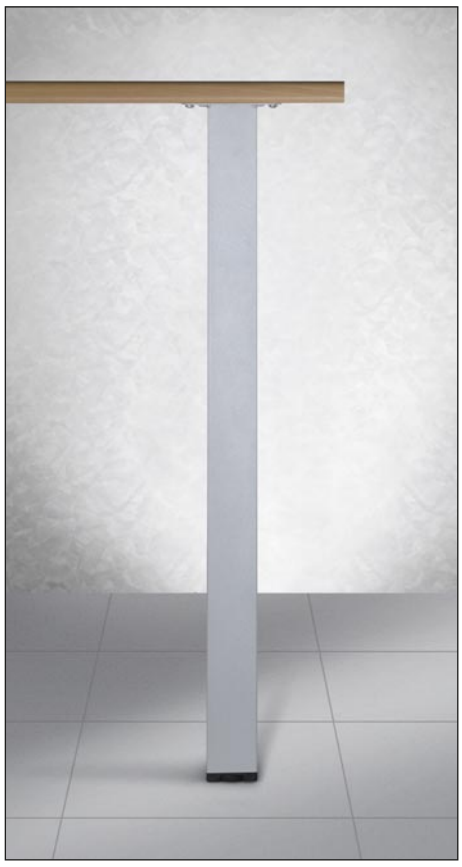

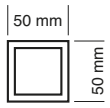

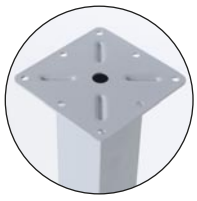

ART. 275R

GAMBA PER TAVOLI
TABLE LEG
PIED DE TABLE
TISCHBEIN

ALTEZZA - HEIGHT - HAUTÊR - HÖHE

Standard cm 71. Terminale regolabile. Disponibile a richiesta per quantità.
Standard size cm 71. Adjustable leg. Available for quantities on request.
Standard taille cm 71. Pied reglabel. Disponible sur demande pour quantitè.
Standard Mass cm 71. Verstellbaresbein. Fuer Mangen auf Ersuchen verfuebar.

FISSAGGIO - FIXING - FIXAGE - FIXIERUNG

Piastra in acciaio 100x100 mm - saldata.
Steel plate 100x100 mm - welded.
Plaque en acier 100x100 mm - soudée.
Stahl-Platte 100x100 mm - geschweisst.

MATERIALE - MATERIAL - MATIÉRE - MATERIAL

Tubo 50x50 mm in acciaio.
Steel tube 50x50 mm.
Tube 50x50 mm en acier.
Stahlrohr 50x50 mm.

FINITURE - FINISHES - EXECUTIONS - AUSFUEHRUNGEN

Verniciatura epossidica tutti i colori.
Ottonato - Nickel satinato - Alluminio - Cromato.
Epoxy painting every colour.
Brassed - Nickel satined - Aluminium - Chromed.
Peinture Epoxide chaque couleur.
Laitonné - Nickel satiné - Aluminium - Chrome.
Epoxy Lackierung jeder Farbe.
Vermessingt - Nickel satiniert - Aluminium - Verchromt.

ART. 281R

GAMBA PER TAVOLI
TABLE LEG
PIED DE TABLE
TISCHBEIN

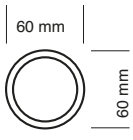

ALTEZZA - HEIGHT - HAUTÊR - HÖHE

Standard cm 71. Terminale regolabile. Disponibile a richiesta per quantità.
Standard size cm 71. Adjustable leg. Available for quantities on request.
Standard taille cm 71. Pied reglabel. Disponible sur demande pour quantitè.
Standard Mass cm 71. Verstellbaresbein. Fuer Mangen auf Ersuchen verfuebar.

FISSAGGIO - FIXING - FIXAGE - FIXIERUNG

Piastra in acciaio 100x100 mm - saldata.
Steel plate 100x100 mm - welded.
Plaque en acier 100x100 mm - soudée.
Stahl-Platte 100x100 mm - geschweisst.

MATERIALE - MATERIAL - MATIÉRE - MATERIAL

Tubo Ø 60 mm in acciaio.
Steel tube Ø 60 mm.
Tube Ø 60 mm en acier.
Stahlrohr Ø 60 mm.

FINITURE - FINISHES - EXECUTIONS - AUSFUEHRUNGEN

Verniciatura epossidica tutti i colori.
Ottonato - Nickel satinato - Alluminio - Cromato.
Epoxy painting every colour.
Brassed - Nickel satined - Aluminium - Chromed.
Peinture Epoxide chaque couleur.
Laitonné - Nickel satiné - Aluminium - Chrome.
Epoxy Lackierung jeder Farbe.
Vermessingt - Nickel satiniert - Aluminium - Verchromt.

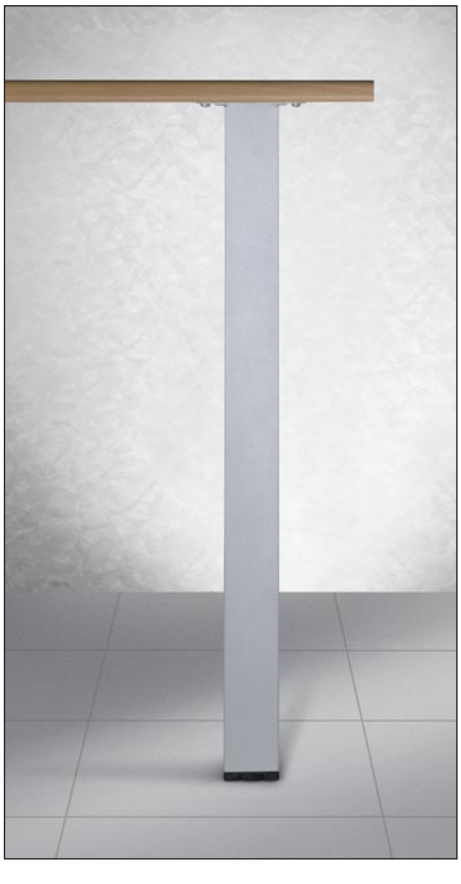

ART. 283R

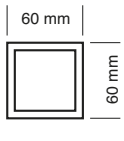

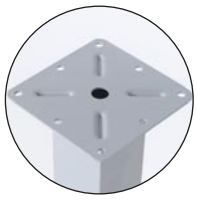

ALTEZZA - HEIGHT - HAUTÊR - HÖHE

Standard cm 71. Terminale regolabile. Disponibile a richiesta per quantità.
Standard size cm 71. Adjustable leg. Available for quantities on request.
Standard taille cm 71. Pied reglabel. Disponible sur demande pour quantitè.
Standard Mass cm 71. Verstellbaresbein. Fuer Mangen auf Ersuchen verfuebar.

FISSAGGIO - FIXING - FIXAGE - FIXIERUNG

Piastra in acciaio 100x100 mm - saldata.
Steel plate 100x100 mm - welded.
Plaque en acier 100x100 mm - soudée.
Stahl-Platte 100x100 mm - geschweisst.

MATERIALE - MATERIAL - MATIÉRE - MATERIAL

Tubo 60x60 mm in acciaio.
Steel tube 60x60 mm.
Tube 60x60 mm en acier.
Stahlrohr 60x60 mm.

FINITURE - FINISHES - EXECUTIONS - AUSFUEHRUNGEN

Verniciatura epossidica tutti i colori.
Ottonato - Nickel satinato - Alluminio - Cromato.
Epoxy painting every colour.
Brassed - Nickel satined - Aluminium - Chromed.
Peinture Epoxide chaque couleur.
Laitonné - Nickel satiné - Aluminium - Chrome.
Epoxy Lackierung jeder Farbe.
Vermessingt - Nickel satiniert - Aluminium - Verchromt.

MANART srl - 23876 MONTICELLO - FRAZ. CORTENUOVA (LC) ITALY - Via T. Moneta, 17 - Tel. 039.920.35.55 - 039.920.26.44 - Fax 039.920.28.01
www.manart.it e-mail: manart@manart.it

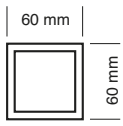

ART. 258R

GAMBA PER TAVOLI CONIFICATA
CONICAL TABLE LEG
PIED DE TABLE CONIQUE
KONISCHE TISCHBEIN

ALTEZZA - HEIGHT - HAUTÊR - HÖHE

Standard cm 71. Terminale regolabile. Disponibile a richiesta per quantità.
Standard size cm 71. Adjustable leg. Available for quantities on request.
Standard taille cm 71. Pied reglabel. Disponible sur demande pour quantitè.
Standard Mass cm 71. Verstellbaresbein. Fuer Mangen auf Ersuchen verfuebar.

FISSAGGIO - FIXING - FIXAGE - FIXIERUNG

Piastra alluminio, smontabile.
Aluminium plate, detachable.
Aluminium plaque, demontable.
Aluminium Platte, Zerlegbares.

MATERIALE - MATERIAL - MATIÉRE - MATERIAL

Tubo 60x60 mm in acciaio.
Steel tube 60x60 mm.
Tube 60x60 mm en acier.
Stahlrohr 60x60 mm.

FINITURE - FINISHES - EXECUTIONS - AUSFUEHRUNGEN

Verniciatura epossidica tutti i colori.
Ottonato - Nickel satinato - Alluminio - Cromato.
Epoxy painting every colour.
Brassed - Nickel satined - Aluminium - Chromed.
Peinture Epoxide chaque couleur.
Laitonné - Nickel satiné - Aluminium - Chrome.
Epoxy Lackierung jeder Farbe.
Vermessingt - Nickel satiniert - Aluminium - Verchromt.

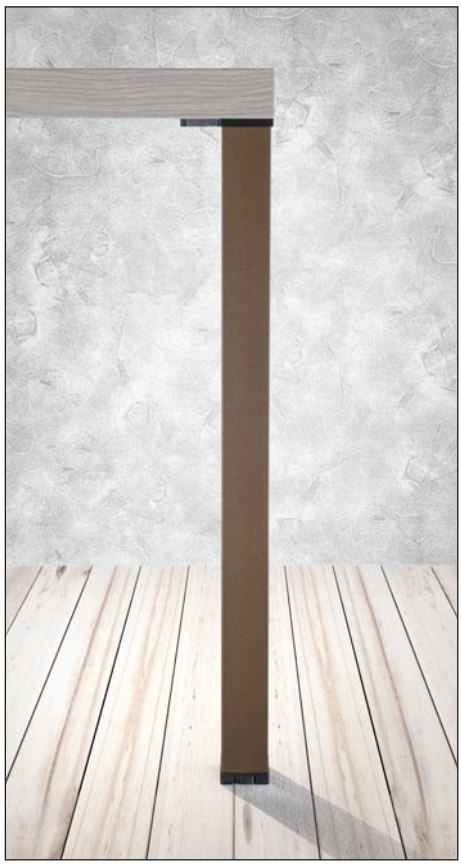

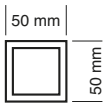

ART. 278R

GAMBA PER TAVOLI
TABLE LEG
PIED DE TABLE
TISCHBEIN

ALTEZZA - HEIGHT - HAUTÊR - HÖHE

Standard 71 e 87 cm. Disponibile a richiesta per quantità.
Standard size 71 and 87 cm. Available for quantities on request.
Standard taille 71 et 87 cm. Disponible sur demande pour quantitè.
Standard Mass 71 und 87 cm. Fuer Mangen auf Ersuchen verfuebar.

FISSAGGIO - FIXING - FIXAGE - FIXIERUNG

Piastra alluminio, smontabile.
Aluminium plate, detachable.
Aluminium plaque, demontable.
Aluminium Platte, Zerlegbares.

MATERIALE - MATERIAL - MATIÉRE - MATERIAL

Tubo 50x50 mm in acciaio.
Steel tube 50x50 mm.
Tube 50x50 mm en acier.
Stahlrohr 50x50 mm.

FINITURE - FINISHES - EXECUTIONS - AUSFUEHRUNGEN

Verniciatura epossidica tutti i colori.
Ottonato - Nickel satinato - Alluminio - Cromato.
Epoxy painting every colour.
Brassed - Nickel satined - Aluminium - Chromed.
Peinture Epoxide chaque couleur.
Laitonné - Nickel satiné - Aluminium - Chrome.
Epoxy Lackierung jeder Farbe.
Vermessingt - Nickel satiniert - Aluminium - Verchromt.

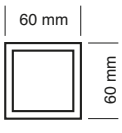

ART. 287R

GAMBA PER TAVOLI
TABLE LEG
PIED DE TABLE
TISCHBEIN

ALTEZZA - HEIGHT - HAUTÊR - HÖHE

Standard:	cm. 68 chiusa, allungabile fino a 87 cm cm. 90 chiusa, allungabile fino a 110 cm.
Standard size	68 cm. extensible to 87 cm 90 cm. extensible to 110 cm.
Standard taille	cm. 68 en position fermée alongeable jusqu'à 87 cm cm. 90 en position fermée alongeable jusqu'à 110 cm.
Standard Mass	cm. 68, geschlossen, ausziehbar bis zu 87 cm cm. 90, geschlossen, ausziehbar bis zu 110 cm.

FISSAGGIO - FIXING - FIXAGE - FIXIERUNG

Piastra in acciaio 100x100 mm - saldata.
Steel plate 100x100 mm - welded.
Plaque en acier 100x100 mm - soudée.
Stahl-Platte 100x100 mm - geschweisst.

MATERIALE - MATERIAL - MATIÉRE - MATERIAL

Tubo 60x60 mm in acciaio.
Steel tube 60x60 mm.
Tube 60x60 mm en acier.
Stahlrohr 60x60 mm.

FINITURE - FINISHES - EXECUTIONS - AUSFUEHRUNGEN

Verniciatura epossidica tutti i colori.
Ottonato - Nickel satinato - Alluminio - Cromato.
Epoxy painting every colour.
Brassed - Nickel satined - Aluminium - Chromed.
Peinture Epoxide chaque couleur.
Laitonné - Nickel satiné - Aluminium - Chrome.
Epoxy Lackierung jeder Farbe.
Vermessingt - Nickel satiniert - Aluminium - Verchromt.

MANART srl - 23876 MONTICELLO - FRAZ. CORTENUOVA (LC) ITALY - Via T. Moneta, 17 - Tel. 039.920.35.55 - 039.920.26.44 - Fax 039.920.28.01
www.manart.it e-mail: manart@manart.it

ART. 253R

GAMBA PIEGHEVOLE PER TAVOLI
FOLDING TABLE LEG
PIED TABLE PLIANTS
KLAPPBARE TISCHBEIN

ALTEZZA - HEIGHT - HAUTÊR - HÖHE

Standard 71 cm. Disponibile a richiesta per quantità.
Standard size 71 cm. Available for quantities on request.
Standard taille 71 cm. Disponible sur demande pour quantitè.
Standard Mass 71 cm. Fuer Mengen auf Ersuchen verfuegbar.

MATERIALE - MATERIAL - MATIÉRE - MATERIAL

Tubo Ø 50 mm. in acciaio. Steel tube Ø 50 mm.
Tube Ø 50 mm. en acier. Stahlrohr Ø 50 mm.

FINITURE - FINISHES - EXECUTIONS - AUSFUEHAUNGEN

Verniciatura epossidica tutti i colori.
Ottonato - Nickel satinato - Alluminio - Cromato.
Epoxy painting every colour.
Brassed - Nickel satined - Aluminium - Chromed.
Peinture Epoxide chaque couleur.
Laitonné - Nickel satiné - Aluminium - Chrome.
Epoxy Lackierung jeder Farbe.
Vermessingt - Nickel satiniert - Aluminium - Verchromt.

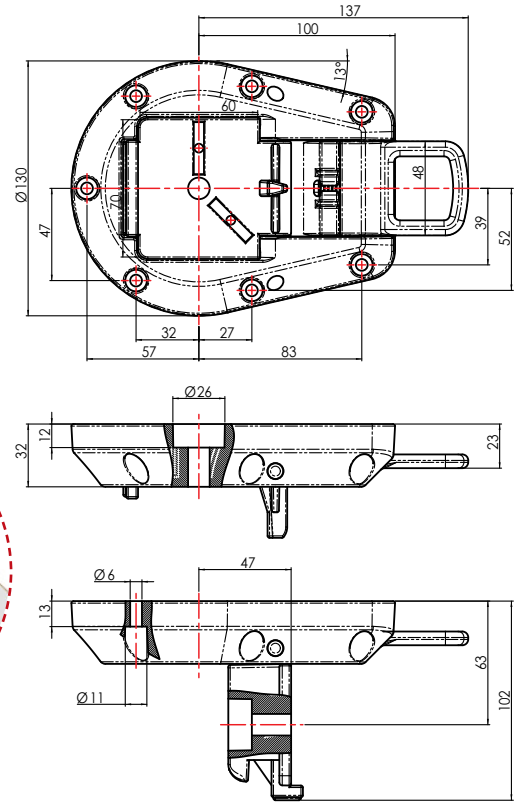

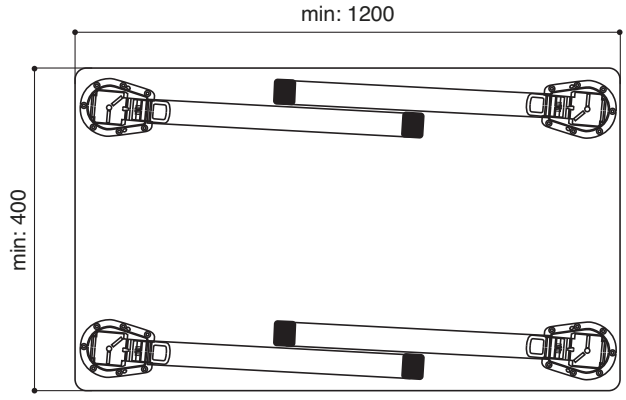

ART. 510

SOSTEGNI PIEGHEVOLI PER TAVOLI
FOLDING TABLE SUPPORT
SUPPORTS POUR TABLES PLIABLES
FALTBARES TISCHGESTELL

ALTEZZA - HEIGHT - HAUTÊR - HÖHE

Standard 71 cm. Terminale regolabile max 1 cm.
Standard size 71 cm. Adjustable leg max 1 cm.
Standard taille 71 cm. Pied reglable max 1 cm.
Standard Mass 71 cm. Verstelbaresbein max 1 cm.

MATERIALE - MATERIAL - MATIÉRE - MATERIAL

Tubo Ø 30 mm in acciaio.
Steel tube Ø 30 mm.
Tube Ø 30 mm en acier.
Stahlrohr Ø 30 mm.

FINITURE - FINISHES - EXECUTIONS - AUSFUEHAUNGEN

Cromato.
Chromed.
Chrome.
Verchromt.

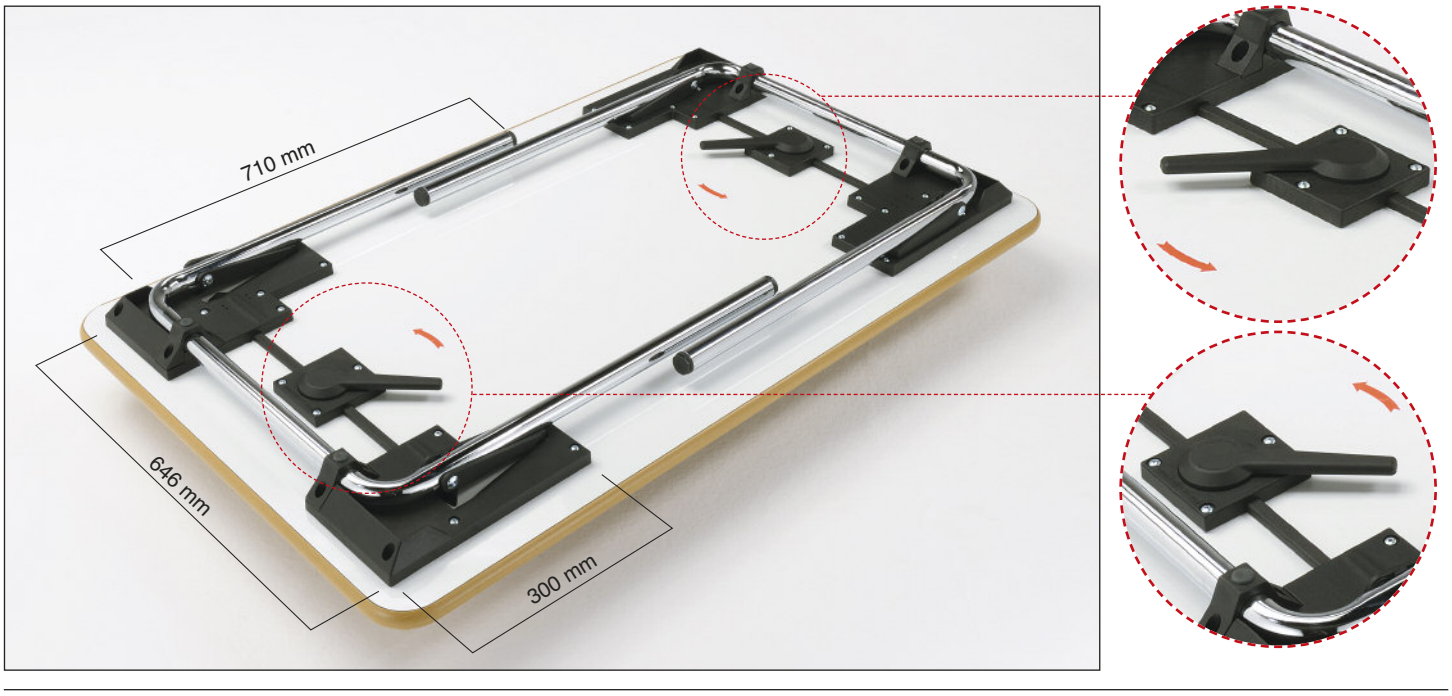

MANART srl - 23876 MONTICELLO - FRAZ. CORTENUOVA (LC) ITALY - Via T. Moneta, 17 - Tel. 039.920.35.55 - 039.920.26.44 - Fax 039.920.28.01
www.manart.it e-mail: manart@manart.it

ART. 503

Basamento in acciaio Ø 400 mm.
Tubo acciaio Ø 60 mm.
H totale 73 cm. Peso kg. 14.
Verniciata epossidica in tutti i colori.
Cromato - Nickel satinato.
Piastra di fissaggio al piano in acciaio stampato 30x30 cm.

Steel base Ø 400 mm.
Steel tube Ø 60 mm.
Total height 73 cm. Weight kg. 14.
Epoxy coated, all colours.
Chromed - Nickel satined.
Fixing plate, pressed steel 30x30 cm.

Base en acier Ø 400 mm.
Tube acier Ø 60 mm.
Hauter totale 73 cm. Poids kg. 14.
Peinture époxide, toutes les couleurs.
Chrome - Nickel satinè.
Plaque de fixation en métal estampé 30x30 cm.

Fussteil aus Stahl Ø 400 mm.
Stahlrohr Ø 60 mm.
Gesamtlaenge: 73 cm. Gewicht: kg. 14.
Epoxylackiert, alle Farben.
Verchromt - Nickel satiniert.
Gestanzte Befestigungsplatte aus Metall 30x30 cm.

ART. 505

Basamento in acciaio Ø 430 mm.
Tubo acciaio Ø 60 mm.
H totale 73 cm. Peso kg. 7*.
Verniciata epossidica in tutti i colori.
Cromato - Nickel satinato.
Piastra di fissaggio al piano in acciaio stampato 30x30 cm.

Steel base Ø 430 mm.
Steel tube Ø 60 mm.
Total height 73 cm. Weight kg. 7*.
Epoxy coated, all colours.
Chromed - Nickel satined.
Fixing plate, pressed steel 30x30 cm.

Base en acier Ø 430 mm.
Tube acier Ø 60 mm.
Hauter totale 73 cm. Poids kg. 7*.
Peinture époxide, toutes les couleurs.
Chrome - Nickel satinè.
Plaque de fixation en métal estampé 30x30 cm.

Fussteil aus Stahl Ø 430 mm.
Stahlrohr Ø 60 mm.
Gesamtlaenge: 73 cm. Gewicht: kg. 7*.
Epoxylackiert, alle Farben.
Verchromt - Nickel satiniert.
Gestanzte Befestigungsplatte aus Metall 30x30 cm.

ART. 504

Basamento in acciaio 400x400 mm.
Tubo acciaio 60x60 mm.
H totale 73 cm. Peso kg. 18.
Verniciata epossidica in tutti i colori.
Cromato - Nickel satinato - Ottonato.
Piastra di fissaggio al piano in acciaio stampato 30x30 cm.

Steel base 400x400 mm.
Steel tube 60x60 mm.
Total height 73 cm. Weight kg. 18.
Epoxy coated, all colours.
Chromed - Nickel satined - Brassed.
Fixing plate, pressed steel 30x30 cm.

Base en acier 400x400 mm.
Tube acier 60x60 mm.
Hauter totale 73 cm. Poids kg. 18.
Peinture époxide, toutes les couleurs.
Chrome - Nickel satinè - Laitonné.
Plaque de fixation en métal estampé 30x30 cm.

Fussteil aus Stahl 400x400 mm.
Stahlrohr 60x60 mm.
Gesamtlaenge: 73 cm. Gewicht: kg. 18.
Epoxylackiert, alle Farben.
Verchromt - Nickel satiniert - Vermessingt.
Gestanzte Befestigungsplatte aus Metall 30x30 cm.

* Zavorra supplementare su richiesta
* Supplementary counterweight upon request * Contrepoids supplémentaire sur demande * Zusatzballast auf Anfrage

ART. 506

Basamento in acciaio 750x400 mm.
Tubo acciaio 80x80 mm.
H totale 73 cm. Peso kg. 38.
Copetura in acciaio cromato o satinato.
Fissaggio al piano con croce in ghisa.

Steel base 750x400 mm.
Steel tube 80x80 mm.
Total height 73 cm. Weight kg. 38.
Chrome or satin steel coating.
Fixing to the top with cast iron cross.

Base coulée 750x400 mm.
Tube acier 80x80 mm.
Hauter totale 73 cm. Poids kg. 38.
Revetement en acier chromé ou satiné
Fixation à la base avec croix en fronte.

Fussteil aus Stahl 750x400 mm.
Stahlrohr 80x80 mm.
Gesamtlaenge: 73 cm. Gewicht: kg. 38.
Abdeckung aus verchromtem oder
satiniertem Stahl.
Befestigungs an del Platte mit
Gusseisenkreuz.

ART. 507

Basamento in acciaio 600x600 mm.
Tubo acciaio 80x80 mm.
H totale 73 cm. Peso kg. 37.
Copetura in acciaio cromato o satinato.
Fissaggio al piano con croce in ghisa.

Steel base 600x600 mm.
Steel tube 80x80 mm.
Total height 73 cm. Weight kg. 37.
Chrome or satin steel coating.
Fixing to the top with cast iron cross.

Base coulée 600x600 mm.
Tube acier 80x80 mm.
Hauter totale 73 cm. Poids kg. 37.
Revetement en acier chromé ou satiné
Fixation à la base avec croix en fronte.

Fussteil aus Stahl 600x600 mm.
Stahlrohr 80x80 mm.
Gesamtlaenge: 73 cm. Gewicht: kg. 37.
Abdeckung aus verchromtem oder
satiniertem Stahl.
Befestigungs an del Platte mit
Gusseisenkreuz.

MANART srl - 23876 MONTICELLO - FRAZ. CORTENUOVA (LC) ITALY - Via T. Moneta, 17 - Tel. 039.920.35.55 - 039.920.26.44 - Fax 039.920.28.01
www.manart.it e-mail: manart@manart.it

ART. 56/H110

Basamento in acciaio Ø 520 mm.
Tubo acciaio Ø 80 mm.
H totale 110 cm. Peso kg. 10*.
Verniciata epossidica in tutti i colori.
Cromato - Nickel satinato - Ottonato.
Piastra di fissaggio al piano in acciaio stampato 30x30 cm.

Steel base 520 mm.
Steel tube Ø 80 mm.
Total height 110 cm. Weight kg. 10*.
Epoxy coated, all colours.
Chromed - Nickel satined - Brassed.
Fixing plate, pressed steel
30x30 cm.

Base en acier Ø 520 mm.
Tube acier Ø 80 mm.
Hauter totale 110 cm. Poids kg. 10*.
Peinture époxide, toutes les couleurs.
Chrome - Nickel satiné - Laitonné.
Plaque de fixation en métal estampé
30x30 cm.

Fussteil aus Stahl Ø 520 mm.
Stahlrohr Ø 80 mm.
Gesamtlaenge: 110 cm. Gewicht: kg. 10*.
Epoxylackiert, alle Farben.
Verchromt - Nickel satiniert - Vermessingt.
Gestanzte Befestigungsplatte aus Metall
30x30 cm.

ART. 56

Basamento in acciaio Ø 520 mm.
Tubo acciaio Ø 80 mm.
H totale 73 cm. Peso kg. 9*.
Verniciata epossidica in tutti i colori.
Cromato - Nickel satinato - Ottonato.
Piastra di fissaggio al piano in acciaio stampato 30x30 cm.

Steel base 520 mm.
Steel tube Ø 80 mm.
Total height 73 cm. Weight kg. 9*.
Epoxy coated, all colours.
Chromed - Nickel satined - Brassed.
Fixing plate, pressed steel
30x30 cm.

Base en acier Ø 520 mm.
Tube acier Ø 80 mm.
Hauter totale 73 cm. Poids kg. 9*.
Peinture époxide, toutes les couleurs.
Chrome - Nickel satiné - Laitonné.
Plaque de fixation en métal estampé
30x30 cm.

Fussteil aus Stahl Ø 520 mm.
Stahlrohr Ø 80 mm.
Gesamtlaenge: 73 cm. Gewicht: kg. 9*.
Epoxylackiert, alle Farben.
Verchromt - Nickel satiniert - Vermessingt.
Gestanzte Befestigungsplatte aus Metall
30x30 cm.

ART. 53

Basamento in acciaio Ø 400 mm.
Tubo acciaio Ø 60 mm.
H totale 73 cm. Peso kg. 7.
Verniciata epossidica in tutti i colori.
Cromato - Nickel satinato - Ottonato.
Piastra di fissaggio al piano in acciaio stampato 30x30 cm.

Steel base 450 mm.
Steel tube Ø 60 mm.
Total height 73 cm. Weight kg. 7.
Epoxy coated, all colours.
Chromed - Nickel satined - Brassed.
Fixing plate, pressed steel
30x30 cm.

Base en acier Ø 400 mm.
Tube acier Ø 60 mm.
Hauter totale 73 cm. Poids kg. 7.
Peinture époxide, toutes les couleurs.
Chrome - Nickel satiné - Laitonné.
Plaque de fixation en métal estampé
30x30 cm.

Fussteil aus Stahl Ø 400 mm.
Stahlrohr Ø 60 mm.
Gesamtlaenge: 73 cm. Gewicht: kg. 7.
Epoxylackiert, alle Farben.
Verchromt - Nickel satiniert - Vermessingt.
Gestanzte Befestigungsplatte aus Metall
30x30 cm.

* Zavorra supplementare su richiesta
* Supplementary counterweight upon request * Contrepoids supplémentaire sur demande * Zusatzballast auf Anfrage

ART. 62

Basamento in ghisa Ø 460 mm.
Tubo acciaio Ø 60 mm.
H totale 73 cm. Peso kg. 16.
Copertura in acciaio cromato o satinato.
Fissaggio al piano con croce in ghisa.

Cast base Ø 460 mm.
Steel tube Ø 60 mm.
Total height 73 cm. Weight kg. 16.
Chrome or satin steel coating.
Fixing to the top with cast iron cross.

Base coulée Ø 460 mm.
Tube acier Ø 60 mm.
Hauter totale 73 cm. Poids kg. 16.
Revêtement en acier chromé ou satiné.
Fixation à la base avec croix en fonte.

Gegossener Fussteil Ø 460 mm.
Stahlrohr Ø 60 mm.
Gesamtlaenge: 73 cm. Gewicht: kg. 16.
Abdeckung aus verchromtem oder satiniertem Stahl.
Befestigung an der Platte mit Gusseisen-kreuz.

ART. 96

Basamento in ghisa Ø 450 mm.
Tubo acciaio Ø 76 mm.
H totale 73 cm. Peso kg. 16.
Copertura in acciaio cromato o satinato.
Fissaggio al piano con croce in ghisa.

Cast base Ø 450 mm.
Steel tube Ø 76 mm.
Total height 73 cm. Weight kg. 16.
Chrome or satin steel coating.
Fixing to the top with cast iron cross.

Base coulée Ø 450 mm.
Tube acier Ø 76 mm.
Hauter totale 73 cm. Poids kg. 16.
Revêtement en acier chromé ou satiné.
Fixation à la base avec croix en fonte.

Gegossener Fussteil Ø 450 mm.
Stahlrohr Ø 76 mm.
Gesamtlaenge: 73 cm.
Gewicht: kg. 16.
Abdeckung aus verchromtem oder satiniertem Stahl.
Befestigung an der Platte mit Gusseisen-kreuz.

ART. 97

Basamento in ghisa 400x400 mm.
Tubo acciaio 80x80 mm.
H totale 73 cm. Peso kg. 18.
Copertura in acciaio cromato o satinato.
Fissaggio al piano con croce in ghisa.

Cast base 400x400 mm.
Steel tube 80x80 mm.
Total height 73 cm. Weight kg. 18.
Chrome or satin steel coating.
Fixing to the top with cast iron cross.

Base coulée 400x400 mm.
Tube acier 80x80 mm.
Hauter totale 73 cm. Poids kg. 18.
Revêtement en acier chromé ou satiné.
Fixation à la base avec croix en fonte.

Gegossener Fussteil 400x400 mm.
Stahlrohr 80x80 mm.
Gesamtlaenge: 73 cm. Gewicht: kg. 18.
Abdeckung aus verchromtem oder satiniertem Stahl.
Befestigung an der Platte mit Gusseisenkreuz.

MANART srl - 23876 MONTICELLO - FRAZ. CORTENUOVA (LC) ITALY - Via T. Moneta, 17 - Tel. 039.920.35.55 - 039.920.26.44 - Fax 039.920.28.01
www.manart.it e-mail: manart@manart.it

ART. 501

Basamento in acciaio Ø 480 mm.
Tubo acciaio Ø 70 mm.
H totale 73 cm. Peso kg. 7,5*.
Verniciata epossidica in tutti i colori.
Cromato - Nickel satinato - Ottonato.
Piastra di fissaggio al piano in acciaio stampato 300x300 mm.

Steel base Ø 430 mm.
Steel tube Ø 70 mm.
Total height 73 cm. Weight kg. 7,5*.
Epoxy coated, all colours.
Chromed - Nickel satined - Brassed.
Fixing plate, pressed steel 300x300 mm.

Base en acier Ø 430 mm.
Tube acier Ø 70 mm.
Hauter totale 73 cm. Poids kg. 7,5*.
Peinture époxide, toutes les couleurs.
Chrome - Nickel satinè - Laitonné.
Plaque de fixation en métal estampé 300x300 mm.

Fussteil aus Stahl Ø 430 mm.
Stahlrohr Ø 70 mm.
Gesamtlaenge: 73 cm. Gewicht: kg. 7,5*.
Epoxylackiert, alle Farben.
Verchromt - Nickel satiniert - Vermessingt.
Gestanzte Befestigungsplatte aus Metall 300x300 mm.

ART. 502

Basamento in acciaio Ø 560 mm.
Tubo acciaio Ø 80 mm.
H totale 73 cm. Peso kg. 8,5*.
Verniciata epossidica in tutti i colori.
Cromato - Nickel satinato - Ottonato.
Piastra di fissaggio al piano in acciaio stampato 300x300 mm.

Steel base Ø 560 mm.
Steel tube Ø 80 mm.
Total height 73 cm. Weight kg. 8,5*.
Epoxy coated, all colours.
Chromed - Nickel satined - Brassed.
Fixing plate, pressed steel 300x300 mm.

Base en acier Ø 560 mm.
Tube acier Ø 80 mm.
Hauter totale 73 cm. Poids kg. 8,5*.
Peinture époxide, toutes les couleurs.
Chrome - Nickel satinè - Laitonné.
Plaque de fixation en métal estampé 300x300 mm.

Fussteil aus Stahl Ø 560 mm.
Stahlrohr Ø 80 mm.
Gesamtlaenge: 73 cm. Gewicht: kg. 8,5*.
Epoxylackiert, alle Farben.
Verchromt - Nickel satiniert - Vermessingt.
Gestanzte Befestigungsplatte aus Metall 300x300 mm.

ART. 500

Basamento in acciaio Ø 420 mm.
Tubo acciaio Ø 60 mm.
H totale 73 cm. Peso kg. 6*.
Verniciata epossidica in tutti i colori.
Cromato - Nickel satinato - Ottonato.
Piastra di fissaggio al piano in acciaio stampato 300x300 mm.

Steel base Ø 420 mm.
Steel tube Ø 60 mm.
Total height 73 cm. Weight kg. 6*.
Epoxy coated, all colours.
Chromed - Nickel satined - Brassed.
Fixing plate, pressed steel 300x300 mm.

Base en acier Ø 420 mm.
Tube acier Ø 60 mm.
Hauter totale 73 cm. Poids kg. 6*.
Peinture époxide, toutes les couleurs.
Chrome - Nickel satinè - Laitonné.
Plaque de fixation en métal estampé 300x300 mm.

Fussteil aus Stahl Ø 420 mm.
Stahlrohr Ø 60 mm.
Gesamtlaenge: 73 cm. Gewicht: kg. 6*.
Epoxylackiert, alle Farben.
Verchromt - Nickel satiniert - Vermessingt.
Gestanzte Befestigungsplatte aus Metall 300x300 mm.

* Zavorra supplementare su richiesta
* Supplementary counterweight upon request * Contrepoids supplémentaire sur demande * Zusatzballast auf Anfrage

ART. 50

Basamento in ghisa 400 x 400 mm.
Tubo acciaio 80 x 80 mm.
H totale 73 cm. Peso kg. 19.
Verniciata epossidica in tutti i colori.
Fissaggio al piano con croce in ghisa.

Cast base 400 x 400 mm.
Steel tube 80 x 80 mm.
Total height 73 cm. Weight kg. 19.
Epoxy coated, all colours.
Fixing to the top with cast iron cross.

Base coulée 400 x 400 mm.
Tube acier 80 x 80 mm.
Hauter totale 73 cm. Poids kg. 19.
Peinture époxide, toutes les couleurs.
Fixation à la base avec croix en fronte.

Gegossener Fussteil 400 x 400 mm.
Stahlrohr 80 x 80 mm.
Gesamtlaenge: 73 cm. Gewicht: kg. 19.
Epoxylackiert, alle Farben.
Befestigungs an del Platte mit
Gusseisenkreuz.

ART. 57

Basamento in ghisa Ø 600 mm.
Tubo acciaio Ø 76 mm.
H totale 73 cm. Peso kg. 31,5.
Verniciata epossidica in tutti i colori.
Fissaggio al piano con croce in ghisa.

Cast base Ø 600 mm.
Steel tube Ø 76 mm.
Total height 73 cm. Weight kg. 31,5.
Epoxy coated, all colours.
Fixing to the top with cast iron cross.

Base coulée Ø 600 mm.
Tube acier Ø 76 mm.
Hauter totale 73 cm. Poids kg. 31,5.
Peinture époxide, toutes les couleurs.
Fixation à la base avec croix en fronte.

Gegossener Fussteil Ø 600 mm.
Stahlrohr 76 80 mm.
Gesamtlaenge: 73 cm. Gewicht: kg. 31,5.
Epoxylackiert, alle Farben.
Befestigungs an del Platte mit
Gusseisenkreuz.

ART. 54

Basamento in ghisa Ø 440 mm.
Tubo acciaio Ø 76 mm.
H totale 73 cm. Peso kg. 16.
Verniciata epossidica in tutti i colori.
Fissaggio al piano con croce in ghisa.

Cast base Ø 440 mm.
Steel tube Ø 76 mm.
Total height 73 cm. Weight kg. 16.
Epoxy coated, all colours.
Fixing to the top with cast iron cross.

Base coulée Ø 440 mm.
Tube acier Ø 76 mm.
Hauter totale 73 cm. Poids kg. 16.
Peinture époxide, toutes les couleurs.
Fixation à la base avec croix en fronte.

Gegossener Fussteil Ø 440 mm.
Stahlrohr Ø 76 mm.
Gesamtlaenge: 73 cm. Gewicht: kg. 16.
Epoxylackiert, alle Farben.
Befestigungs an del Platte mit
Gusseisenkreuz.

MANART srl - 23876 MONTICELLO - FRAZ. CORTENUOVA (LC) ITALY - Via T. Moneta, 17 - Tel. 039.920.35.55 - 039.920.26.44 - Fax 039.920.28.01
www.manart.it e-mail: manart@manart.it

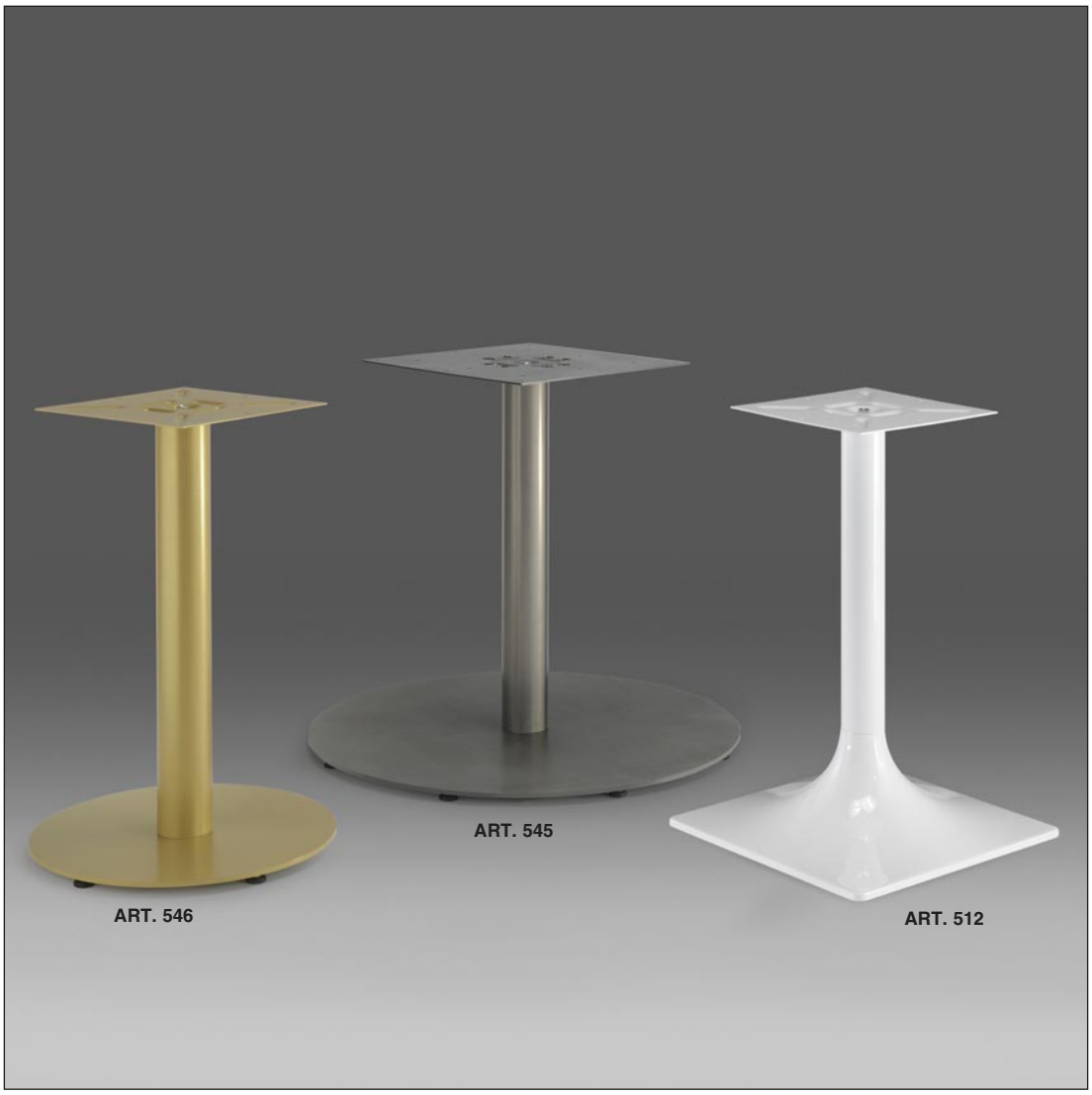

ART. 546

Basamento in acciaio Ø 450 mm.
Tubo acciaio Ø 80 mm.
H totale 73 cm. Peso kg. 14,70.
Verniciata epossidica in tutti i colori.
Piastra di fissaggio al piano in acciaio stampato 300x300 mm.

Steel base Ø 450 mm.
Steel tube Ø 80 mm.
Total height 73 cm. Weight kg. 14,70.
Epoxy coated, all colours.
Fixing plate, pressed steel 300x300 mm.

Base en acier Ø 450 mm.
Tube acier Ø 80 mm.
Hauter totale 73 cm. Poids kg. 14,70.
Peinture époxide, toutes les couleurs.
Plaque de fixation en métal estampé 300x300 mm.

Fussteil aus Stahl Ø 450 mm.
Stahlrohr Ø 80 mm.
Gesamtlaenge: 73 cm. Gewicht: kg. 14,70.
Epoxylackiert, alle Farben.
Gestanzte Befestigungsplatte aus Metall 300x300 mm.

ART. 545

Basamento in acciaio Ø 740 mm.
Tubo acciaio Ø 80 mm.
H totale 73 cm. Peso kg. 34,80.
Verniciata epossidica in tutti i colori.
Piastra di fissaggio al piano in acciaio stampato 400x400 mm.

Steel base Ø 740 mm.
Steel tube Ø 80 mm.
Total height 73 cm. Weight kg. 34,80.
Epoxy coated, all colours.
Fixing plate, pressed steel 400x400 mm.

Base en acier Ø 740 mm.
Tube acier Ø 80 mm.
Hauter totale 73 cm. Poids kg. 34,80.
Peinture époxide, toutes les couleurs.
Plaque de fixation en métal estampé 400x400 mm.

Fussteil aus Stahl Ø 740 mm.
Stahlrohr Ø 80 mm.
Gesamtlaenge: 73 cm. Gewicht: kg. 34,80.
Epoxylackiert, alle Farben.
Gestanzte Befestigungsplatte aus Metall 400x400 mm.

ART. 512

Basamento in acciaio 450x450 mm.
Tubo acciaio Ø 60 mm.
H totale 73 cm. Peso kg. 19.
Verniciata epossidica in tutti i colori.
Cromato - Nickel satinato - Ottonato.
Piastra di fissaggio al piano in acciaio stampato 300x300 mm.

Steel base 450x450 mm.
Steel tube Ø 60 mm.
Total height 73 cm. Weight kg. 19.
Epoxy coated, all colours.
Chromed - Nickel satined - Brassed.
Fixing plate, pressed steel 300x300 mm.

Base en acier 450x450 mm.
Tube acier Ø 60 mm.
Hauter totale 73 cm. Poids kg. 19.
Peinture époxide, toutes les couleurs.
Chrome - Nickel satinè - Laitonné.
Plaque de fixation en métal estampé 300x300 mm

Fussteil aus Stahl 450x450 mm.
Stahlrohr Ø 60 mm.
Gesamtlaenge: 73 cm. Gewicht: kg. 19.
Epoxylackiert, alle Farben.
Verchromt - Nickel satiniert - Vermessingt.
Gestanzte Befestigungsplatte aus Metall 300x300 mm.

ART. 513

Basamento in acciaio 400x400 mm.
Tubo acciaio 80x80 mm.
H totale 73 cm. Peso kg. 18.
Verniciata epossidica in tutti i colori.
Cromato - Nickel satinato - Ottonato.
Piastra di fissaggio al piano in acciaio
stampato 300x300 mm.

Steel base 400x400 mm.
Steel tube 80x80 mm.
Total height 73 cm. Weight kg. 18.
Epoxy coated, all colours.
Chromed - Nickel satined - Brassed.
Fixing plate, pressed steel 300x300 mm.

Base en acier 400x400 mm.
Tube acier 80x80 mm.
Hauter totale 73 cm. Poids kg. 18.
Peinture époxide, toutes les couleurs.
Chrome - Nickel satinè - Laitonné.
Plaque de fixation en métal
estampé 300x300 mm.

Fussteil aus Stahl 400x400 mm.
Stahlrohr 80x80 mm.
Gesamtlaenge: 73 cm. Gewicht: kg. 18.
Epoxylackiert, alle Farben.
Verchromt - Nickel satiniert - Vermessingt.
Gestanzte Befestigungsplatte aus
Metall 300x300 mm.

ART. 514

Basamento in acciaio 500x500 mm.
Tubo acciaio 80x80 mm.
H totale 73 cm. Peso kg. 27.
Verniciata epossidica in tutti i colori.
Cromato - Nickel satinato - Ottonato.
Piastra di fissaggio al piano in acciaio
stampato 400x400 mm.

Steel base 500x500 mm.
Steel tube 80x80 mm.
Total height 73 cm. Weight kg. 27.
Epoxy coated, all colours.
Chromed - Nickel satined - Brassed.
Fixing plate, pressed steel 400x400 mm.

Base en acier 500x500 mm.
Tube acier 80x80 mm.
Hauter totale 73 cm. Poids kg. 27.
Peinture époxide, toutes les couleurs.
Chrome - Nickel satinè - Laitonné.
Plaque de fixation en métal
estampé 400x400 mm.

Fussteil aus Stahl 500x500 mm.
Stahlrohr 80x80 mm.
Gesamtlaenge: 73 cm. Gewicht: kg. 27.
Epoxylackiert, alle Farben.
Verchromt - Nickel satiniert - Vermessingt.
Gestanzte Befestigungsplatte aus
Metall 400x400 mm.

MANART srl - 23876 MONTICELLO - FRAZ. CORTENUOVA (LC) ITALY - Via T. Moneta, 17 - Tel. 039.920.35.55 - 039.920.26.44 - Fax 039.920.28.01
www.manart.it e-mail: manart@manart.it

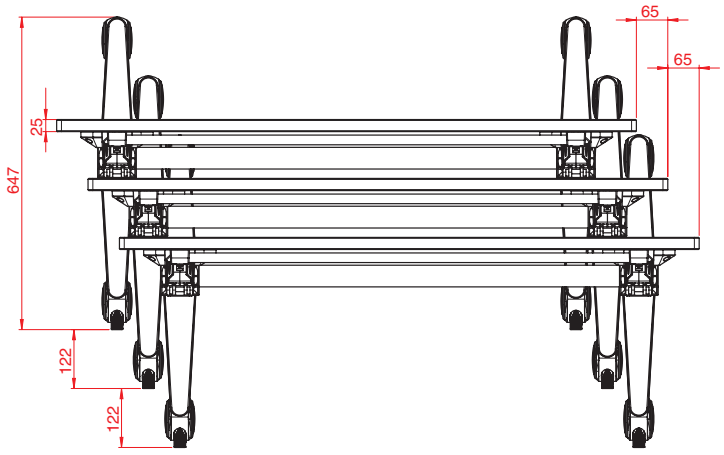

ART. 515

FUSTO TAVOLO PER PIANO PIEGHEVOLE
TABLE SUPPORT BASE FOR FOLDABLE TOP
FÛT TABLE POUR PLATEAU PLIANT
TISCHGESTELL FÜR KLAPPBARE PLATTE

DIMENSIONI - DIMENSIONS - DIMENSIONS - MASSE

Fusto tavolo	per	piano pighevole
Table support base	for	foldable top
Fût table	pour	plateau pliant
Tischgestell	fur	klappbare Platte

cm 110	cm 120x80
cm 130	cm 140x80
cm 150	cm 160x80
cm 170	cm 180x80

MATERIALE - MATERIAL - MATIÉRE - MATERIAL

Tubo Ø 60 mm. in acciaio. Steel tube Ø 60 mm.
Tube Ø 60 mm. en acier. Stahlrohr Ø 60 mm.

FINITURE - FINISHES - EXECUTIONS - AUSFUEHAUNGEN

Cromato - nero / Chromed - black / Chrome - noir / Verchromt - Schwarz.

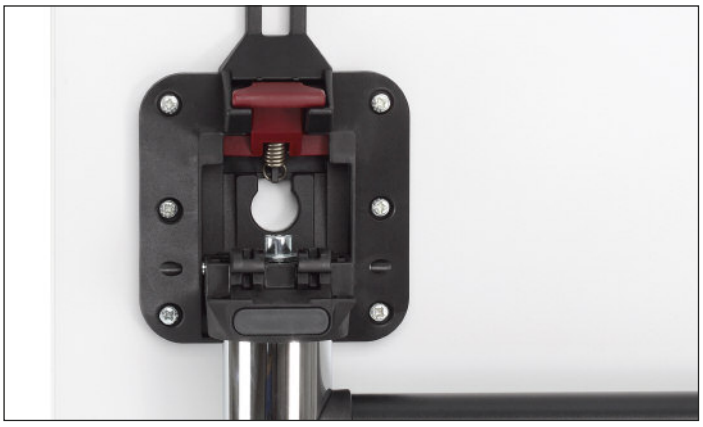

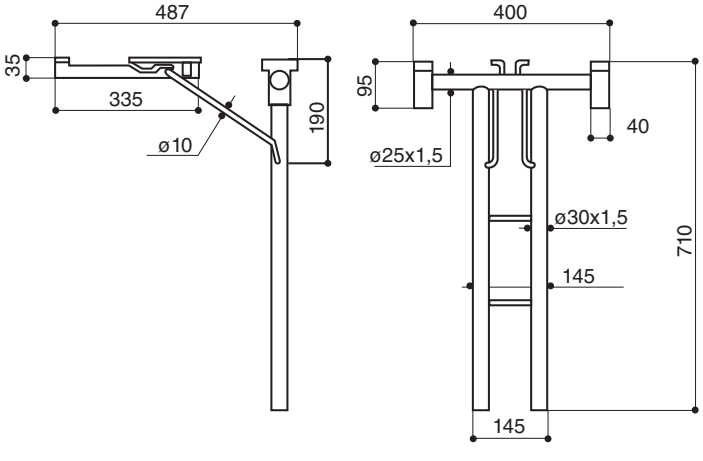

ART. 60

SOSTEGNI PIEGHEVOLI PER TAVOLI
FOLDING TABLE SUPPORT
SUPPORTS POUR TABLES PLIABLES
FALTBARES TISCHGESTELL

DIMENSIONI - DIMENSIONS - DIMENSIONS - MASSE

Standard 71 cm. Terminale regolabile max 1 cm.
Disponibile a richiesta per quantità.
Standard size 71 cm. Adjustable leg max 1 cm.
Available for quantities on request.
Standard taille 71 cm. Pied reglable max 1 cm.
Disponible sur demande pour quantitè.
Standard Mass 71 cm. Verstelbaresbein max 1 cm.
Fuer Mengen auf Ersuchen verfuegbar.

FINITURE - FINISHES - EXECUTIONS - AUSFUEHAUNGEN

Verniciatura epossidica tutti i colori.
Ottonato - Nickel satinato - Alluminio - Cromato.
Epoxy painting every colour.
Brassed - Nickel satined - Aluminium - Chromed.
Peinture epoxide chaque couleur.
Laitonné - Nickel satiné - Aluminium - Chrome.
Epoxy Lackierung jader Farbe.
Vermessingt - Nickel satiniert - Aluminium - Verchromt.

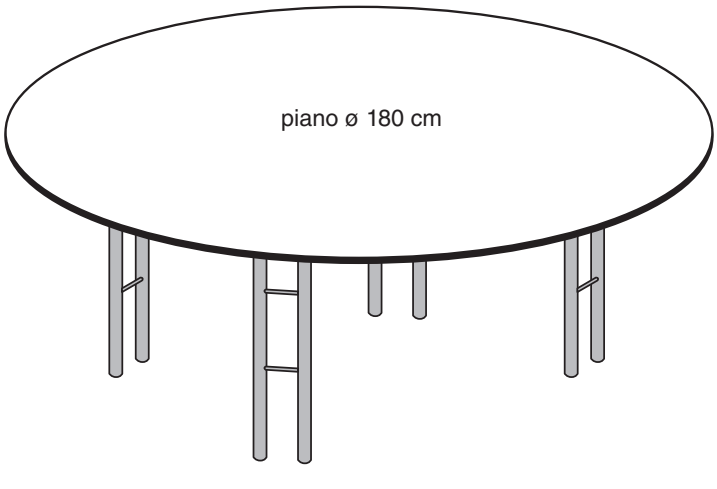

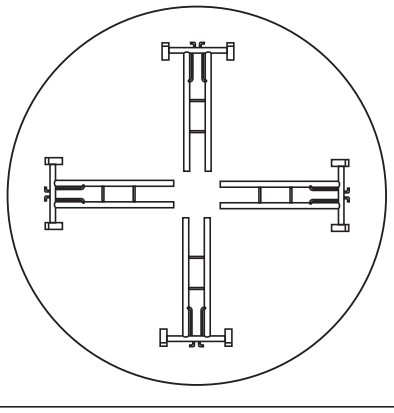

MANART srl - 23876 MONTICELLO - FRAZ. CORTENUOVA (LC) ITALY - Via T. Moneta, 17 - Tel. 039.920.35.55 - 039.920.26.44 - Fax 039.920.28.01
www.manart.it e-mail: manart@manart.it

ART. 506/SC

Basamento in acciaio 750x400 mm.
Tubo acciaio 80x80 mm.
H totale 73 cm. Peso kg. 31,50.
Verniciata epossidica in tutti i colori.
Piastra di fissaggio al piano in acciaio stampato 300x300 mm.

Steel base 750x400 mm.
Steel tube 80x80 mm.
Total height 73 cm. Weight kg. 31,50.
Epoxy coated, all colours.
Fixing plate, pressed steel 300x300 mm.

Base en acier 750x400 mm.
Tube acier 80x80 mm.
Hauter totale 73 cm. Poids kg. 31,50.
Peinture époxide, toutes les couleurs.
Plaque de fixation en métal estampé 300x300 mm.

Fussteil aus Stahl 750x400 mm.
Stahlrohr 80x80 mm.
Gesamtlaenge: 73 cm. Gewicht: kg. 31,50.
Epoxylackiert, alle Farben.
Gestanzte Befestigungsplatte aus Metall 300x300 mm.

ART. 511/SC

Basamento in acciaio 600x400 mm.
Tubo acciaio 80x80 mm.
H totale 73 cm. Peso kg. 24,50.
Verniciata epossidica in tutti i colori.
Piastra di fissaggio al piano in acciaio stampato 400x400 mm.

Steel base 600x400 mm.
Steel tube 80x80 mm.
Total height 73 cm. Weight kg. 24,50.
Epoxy coated, all colours.
Fixing plate, pressed steel 400x400 mm.

Base en acier 600x400 mm.
Tube acier 80x80 mm.
Hauter totale 73 cm. Poids kg. 24,50.
Peinture époxide, toutes les couleurs.
Plaque de fixation en métal estampé 400x400 mm.

Fussteil aus Stahl 600x400 mm.
Stahlrohr 80x80 mm.
Gesamtlaenge: 73 cm. Gewicht: kg. 24,50.
Epoxylackiert, alle Farben.
Gestanzte Befestigungsplatte aus Metall 400x400 mm.

ART. 518

Basamento in acciaio Ø 400 mm.
Tubo acciaio Ø 60 mm.
Altezza totale 73 cm. Peso kg. 12,5.
Verniciata epossidica in tutti i colori.
Cromato - Nickel satinato.
Piastra di fissaggio al piano pieghevole
150x150 mm.

Steel base Ø 400 mm.
Steel tube Ø 60 mm.
Total height 73 cm. Weight kg. 12,5.
Epoxy coated, all colours.
Chromed - Nickel satined.
Assembly Mounting plate for foldable
top 150x150 mm.

Base en acier Ø 400 mm.
Tube acier Ø 60 mm.
Hauter totale 73 cm. Poids kg. 12,5.
Peinture époxide, toutes les couleurs.
Chrome - Nickel satinè.
Plaque de fixation pour plateau
pliant 150x150 mm.

Fussteil aus Stahl Ø 400 mm.
Stahlrohr Ø 60 mm.
Gesamtlaenge 73 cm: 73 cm. Gewicht: kg. 12,5.
Epoxylackiert, alle Farben.
Verchromt - Nickel satiniert.
Befestigungsplatte für klappbare
Platte 150x150 mm.

ART. 519

Basamento in acciaio Ø 700 mm.
Tubo acciaio Ø 70 mm.
Altezza totale 73 cm. Peso kg. 11.
Verniciata epossidica in tutti i colori.
Piastra di fissaggio al piano pieghevole
150x150 mm.

Steel base Ø 700 mm.
Steel tube Ø 70 mm.
Total height 73 cm. Weight kg. 11.
Epoxy coated, all colours.
Assembly Mounting plate for foldable
top 150x150 mm.

Base en acier Ø 700 mm.
Tube acier Ø 70 mm.
Hauter totale 73 cm. Poids kg. 11.
Peinture époxide, toutes les couleurs.
Plaque de fixation pour plateau
pliant 150x150 mm.

Fussteil aus Stahl Ø 700 mm.
Stahlrohr Ø 70 mm.
Gesamtlaenge 73 cm: 73 cm. Gewicht: kg. 11.
Epoxylackiert, alle Farben.
Befestigungsplatte für klappbare
Platte 150x150 mm.

MANART srl - 23876 MONTICELLO - FRAZ. CORTENUOVA (LC) ITALY - Via T. Moneta, 17 - Tel. 039.920.35.55 - 039.920.26.44 - Fax 039.920.28.01
www.manart.it e-mail: manart@manart.it

ART. 522

Basamento in acciaio 600x600x600 mm.
Tubo acciaio Ø 60 mm.
H totale 73 cm. Peso kg. 22.
Verniciata epossidica in tutti i colori.
Cromato - Nickel satinato - Ottonato.
Piastra di fissaggio al piano in acciaio stampato 30x30 cm.

Steel base 600x600x600 mm.
Steel tube Ø 60 mm.
Total height 73 cm. Weight kg. 22.
Epoxy coated, all colours.
Chromed - Nickel satined - Brassed.
Fixing plate, pressed steel 30x30 cm.

Base en acier 600x600x600 mm.
Tube acier Ø 60 mm.
Hauter totale 73 cm. Poids kg. 22.
Peinture époxide, toutes les couleurs.
Chrome - Nickel satinè - Laitonné.
Plaque de fixation en métal estampé 30x30 cm.

Fussteil aus Stahl 600x600x600 mm.
Stahlrohr Ø 60 mm.
Gesamtlaenge: 73 cm. Gewicht: kg. 22.
Epoxylackiert, alle Farben.
Verchromt - Nickel satiniert - Vermessingt.
Gestanzte Befestigungsplatte aus Metall 30x30 cm.

ART. 520

Basamento in acciaio 430x430x430 mm.
Tubo acciaio Ø 60 mm.
H totale 73 cm. Peso kg. 13.
Verniciata epossidica in tutti i colori.
Cromato - Nickel satinato - Ottonato.
Piastra di fissaggio al piano in acciaio stampato 30x30 cm.

Steel base 430x430x430 mm.
Steel tube Ø 60 mm.
Total height 73 cm. Weight kg. 13.
Epoxy coated, all colours.
Chromed - Nickel satined - Brassed.
Fixing plate, pressed steel 30x30 cm.

Base en acier 430x430x430 mm.
Tube acier Ø 60 mm.
Hauter totale 73 cm. Poids kg. 13.
Peinture époxide, toutes les couleurs.
Chrome - Nickel satinè - Laitonné.
Plaque de fixation en métal estampé 30x30 cm.

Fussteil aus Stahl 430x430x430 mm.
Stahlrohr Ø 60 mm.
Gesamtlaenge: 73 cm. Gewicht: kg. 13.
Epoxylackiert, alle Farben.
Verchromt - Nickel satiniert - Vermessingt.
Gestanzte Befestigungsplatte aus Metall 30x30 cm.

ART. 521

Basamento in acciaio 500x500x500 mm.
Tubo acciaio Ø 60 mm.
H totale 73 cm. Peso kg. 17.
Verniciata epossidica in tutti i colori.
Cromato - Nickel satinato - Ottonato.
Piastra di fissaggio al piano in acciaio stampato 30x30 cm.

Steel base 500x500x500 mm.
Steel tube Ø 60 mm.
Total height 73 cm. Weight kg. 17.
Epoxy coated, all colours.
Chromed - Nickel satined - Brassed.
Fixing plate, pressed steel 30x30 cm.

Base en acier 500x500x500 mm.
Tube acier Ø 60 mm.
Hauter totale 73 cm. Poids kg. 17.
Peinture époxide, toutes les couleurs.
Chrome - Nickel satinè - Laitonné.
Plaque de fixation en métal estampé 30x30 cm.

Fussteil aus Stahl 500x500x500 mm.
Stahlrohr Ø 60 mm.
Gesamtlaenge: 73 cm. Gewicht: kg. 17.
Epoxylackiert, alle Farben.
Verchromt - Nickel satiniert - Vermessingt.
Gestanzte Befestigungsplatte aus Metall 30x30 cm.

ART. 525

Basamento in acciaio 560x560 mm.
Tubo acciaio Ø 80 mm.
H totale 73 cm. Peso kg. 23.
Verniciata epossidica in tutti i colori.
Cromato - Nickel satinato - Ottonato.
Piastra di fissaggio al piano in acciaio stampato 30x30 cm.

Steel base 560x560 mm.
Steel tube Ø 80 mm.
Total height 73 cm. Weight kg. 23.
Epoxy coated, all colours.
Chromed - Nickel satined - Brassed.
Fixing plate, pressed steel 30x30 cm.

Base en acier 560x560 mm.
Tube acier Ø 80 mm.
Hauter totale 73 cm. Poids kg. 23.
Peinture époxide, toutes les couleurs.
Chrome - Nickel satinè - Laitonné.
Plaque de fixation en métal estampé 30x30 cm.

Fussteil aus Stahl 560x560 mm.
Stahlrohr Ø 80 mm.
Gesamtlaenge: 73 cm. Gewicht: kg. 23.
Epoxylackiert, alle Farben.
Verchromt - Nickel satiniert - Vermessingt.
Gestanzte Befestigungsplatte aus Metall 30x30 cm.

ART. 523

Basamento in acciaio 400x400 mm.
Tubo acciaio Ø 60 mm.
H totale 73 cm. Peso kg. 14.
Verniciata epossidica in tutti i colori.
Cromato - Nickel satinato - Ottonato.
Piastra di fissaggio al piano in acciaio stampato 30x30 cm.

Steel base 400x400 mm.
Steel tube Ø 60 mm.
Total height 73 cm. Weight kg. 14.
Epoxy coated, all colours.
Chromed - Nickel satined - Brassed.
Fixing plate, pressed steel 30x30 cm.

Base en acier 400x400 mm.
Tube acier Ø 60 mm.
Hauter totale 73 cm. Poids kg. 14.
Peinture époxide, toutes les couleurs.
Chrome - Nickel satinè - Laitonné.
Plaque de fixation en métal estampé 30x30 cm.

Fussteil aus Stahl 400x400 mm.
Stahlrohr Ø 60 mm.
Gesamtlaenge: 73 cm. Gewicht: kg. 14.
Epoxylackiert, alle Farben.
Verchromt - Nickel satiniert - Vermessingt.
Gestanzte Befestigungsplatte aus Metall 30x30 cm.

ART. 524

Basamento in acciaio 460x460 mm.
Tubo acciaio Ø 60 mm.
H totale 73 cm. Peso kg. 17.
Verniciata epossidica in tutti i colori.
Cromato - Nickel satinato - Ottonato.
Piastra di fissaggio al piano in acciaio stampato 30x30 cm.

Steel base 460x460 mm.
Steel tube Ø 60 mm.
Total height 73 cm. Weight kg. 17.
Epoxy coated, all colours.
Chromed - Nickel satined - Brassed.
Fixing plate, pressed steel 30x30 cm.

Base en acier 460x460 mm.
Tube acier Ø 60 mm.
Hauter totale 73 cm. Poids kg. 17.
Peinture époxide, toutes les couleurs.
Chrome - Nickel satinè - Laitonné.
Plaque de fixation en métal estampé 30x30 cm.

Fussteil aus Stahl 460x460 mm.
Stahlrohr Ø 60 mm.
Gesamtlaenge: 73 cm. Gewicht: kg. 17.
Epoxylackiert, alle Farben.
Verchromt - Nickel satiniert - Vermessingt.
Gestanzte Befestigungsplatte aus Metall 30x30 cm.

MANART srl - 23876 MONTICELLO - FRAZ. CORTENUOVA (LC) ITALY - Via T. Moneta, 17 - Tel. 039.920.35.55 - 039.920.26.44 - Fax 039.920.28.01
www.manart.it e-mail: manart@manart.it

ART. 527

Basamento in acciaio 800x400 mm.
Tubo acciaio Ø 60 mm.
H totale 73 cm. Peso kg. 25.
Verniciata epossidica in tutti i colori.
Cromato - Nickel satinato - Ottonato.
Piastra di fissaggio al piano in acciaio
stampato 30x30 cm.

Steel base 800x400 mm.
Steel tube Ø 60 mm.
Total height 73 cm. Weight kg. 25.
Epoxy coated, all colours.
Chromed - Nickel satined - Brassed.
Fixing plate, pressed steel 30x30 cm.

Base en acier 800x400 mm.
Tube acier Ø 60 mm.
Hauter totale 73 cm. Poids kg. 25.
Peinture époxide, toutes les couleurs.
Chrome - Nickel satinè - Laitonné.
Plaque de fixation en métal
estampé 30x30 cm.

Fussteil aus Stahl 800x400 mm.
Stahlrohr Ø 60 mm.
Gesamtlaenge: 73 cm. Gewicht: kg. 25.
Epoxylackiert, alle Farben.
Verchromt - Nickel satiniert - Vermessingt.
Gestanzte Befestigungsplatte aus
Metall 30x30 cm.

ART. 526

Basamento in acciaio 600x300 mm.
Tubo acciaio Ø 50 mm.
H totale 73 cm. Peso kg. 16.
Verniciata epossidica in tutti i colori.
Cromato - Nickel satinato - Ottonato.
Piastra di fissaggio al piano in acciaio
stampato 40x40 cm.

Steel base 600x300 mm.
Steel tube Ø 50 mm.
Total height 73 cm. Weight kg. 16.
Epoxy coated, all colours.
Chromed - Nickel satined - Brassed.
Fixing plate, pressed steel 40x40 cm.

Base en acier 600x300 mm.
Tube acier Ø 50 mm.
Hauter totale 73 cm. Poids kg. 16.
Peinture époxide, toutes les couleurs.
Chrome - Nickel satinè - Laitonné.
Plaque de fixation en métal
estampé 40x40 cm.

Fussteil aus Stahl 600x300 mm.
Stahlrohr Ø 50 mm.
Gesamtlaenge: 73 cm. Gewicht: kg. 16.
Epoxylackiert, alle Farben.
Verchromt - Nickel satiniert - Vermessingt.
Gestanzte Befestigungsplatte aus
Metall 40x40 cm.

ART. 528

Basamento in acciaio 700x450 mm.
Tubo acciaio Ø 60 mm.
H totale 73 cm. Peso kg. 17.
Verniciata epossidica in tutti i colori.
Cromato - Nickel satinato - Ottonato.
Piastra di fissaggio al piano in acciaio
stampato 30x30 cm.

Steel base 700x450 mm.
Steel tube Ø 60 mm.
Total height 73 cm. Weight kg. 17.
Epoxy coated, all colours.
Chromed - Nickel satined - Brassed.
Fixing plate, pressed steel 30x30 cm.

Base en acier 700x450 mm.
Tube acier Ø 60 mm.
Hauter totale 73 cm. Poids kg. 17.
Peinture époxide, toutes les couleurs.
Chrome - Nickel satinè - Laitonné.
Plaque de fixation en métal
estampé 30x30 cm.

Fussteil aus Stahl 700x450 mm.
Stahlrohr Ø 60 mm.
Gesamtlaenge: 73 cm. Gewicht: kg. 17.
Epoxylackiert, alle Farben.
Verchromt - Nickel satiniert - Vermessingt.
Gestanzte Befestigungsplatte aus
Metall 30x30 cm.

ART. 529

Basamento in acciaio Ø 500 mm.
Tubo acciaio Ø 50 mm.
H totale 73 cm. Peso kg. 8.
Verniciata epossidica in tutti i colori.
Cromato - Nickel satinato - Ottonato.
Piastra di fissaggio al piano in acciaio
stampato 30x30 cm.

Steel base Ø 500 mm.
Steel tube Ø 50 mm.
Total height 73 cm. Weight kg. 8.
Epoxy coated, all colours.
Chromed - Nickel satined - Brassed.
Fixing plate, pressed steel 30x30 cm.

Base en acier Ø 500 mm.
Tube acier Ø 50 mm.
Hauter totale 73 cm. Poids kg. 8.
Peinture époxide, toutes les couleurs.
Chrome - Nickel satinè - Laitonné.
Plaque de fixation en métal
estampé 30x30 cm.

Fussteil aus Stahl Ø 500 mm.
Stahlrohr Ø 50 mm.
Gesamtlaenge: 73 cm. Gewicht: kg. 8.
Epoxylackiert, alle Farben.
Verchromt - Nickel satiniert - Vermessingt.
Gestanzte Befestigungsplatte aus
Metall 30x30 cm.

MANART srl - 23876 MONTICELLO - FRAZ. CORTENUOVA (LC) ITALY - Via T. Moneta, 17 - Tel. 039.920.35.55 - 039.920.26.44 - Fax 039.920.28.01
www.manart.it e-mail: manart@manart.it

ART. 533

Basamento in acciaio Ø 600 mm.
Tubo acciaio Ø 80 mm.
H totale 73 cm. Peso kg. 26.
Verniciata epossidica in tutti i colori.
Cromato - Nickel satinato.
Piastra di fissaggio al piano in acciaio stampato 400x400 mm.

Steel base Ø 600 mm.
Steel tube Ø 80 mm.
Total height 73 cm. Weight kg. 26.
Epoxy coated, all colours.
Chromed - Nickel satined.
Fixing plate, pressed steel 400x400 mm.

Base en acier Ø 600 mm.
Tube acier Ø 80 mm.
Hauter totale 73 cm. Poids kg. 26.
Chrome - Nickel satinè - Laitonné.
Plaque de fixation en métal estampé 400x400 mm.

Stahlbasis Ø 600 mm.
Stahlrohr Ø 80 mm.
Gesamtlaenge: 73 cm. Gewicht: kg. 26.
Epoxylackiert, alle Farben.
Verchromt - Nickel satiniert.
Gestanzte Befestigungsplatte aus Metall 400x400 mm.

ART. 534

Basamento in alluminio 675x675 mm.
Tubo acciaio Ø 60 mm.
H totale 73 cm. Peso kg. 5.
Verniciata epossidica in tutti i colori.
Cromato - Nickel satinato.
Piastra di fissaggio al piano in acciaio stampato 300x300 mm.

Aluminium base 675x675 mm.
Steel tube Ø 60 mm.
Total height 73 cm. Weight kg. 5.
Epoxy coated, all colours.
Chromed - Nickel satined.
Fixing plate, pressed steel 300x300 mm.

Base Aluminium 675x675 mm.
Tube acier Ø 60 mm.
Hauter totale 73 cm. Poids kg. 5.
Chrome - Nickel satinè - Laitonné.
Plaque de fixation en métal estampé 300x300 mm.

Aluminium Fussteil 675x675 mm.
Stahlrohr Ø 60 mm.
Gesamtlaenge: 73 cm. Gewicht: kg. 5.
Epoxylackiert, alle Farben.
Verchromt - Nickel satiniert.
Gestanzte Befestigungsplatte aus Metall 300x300 mm.

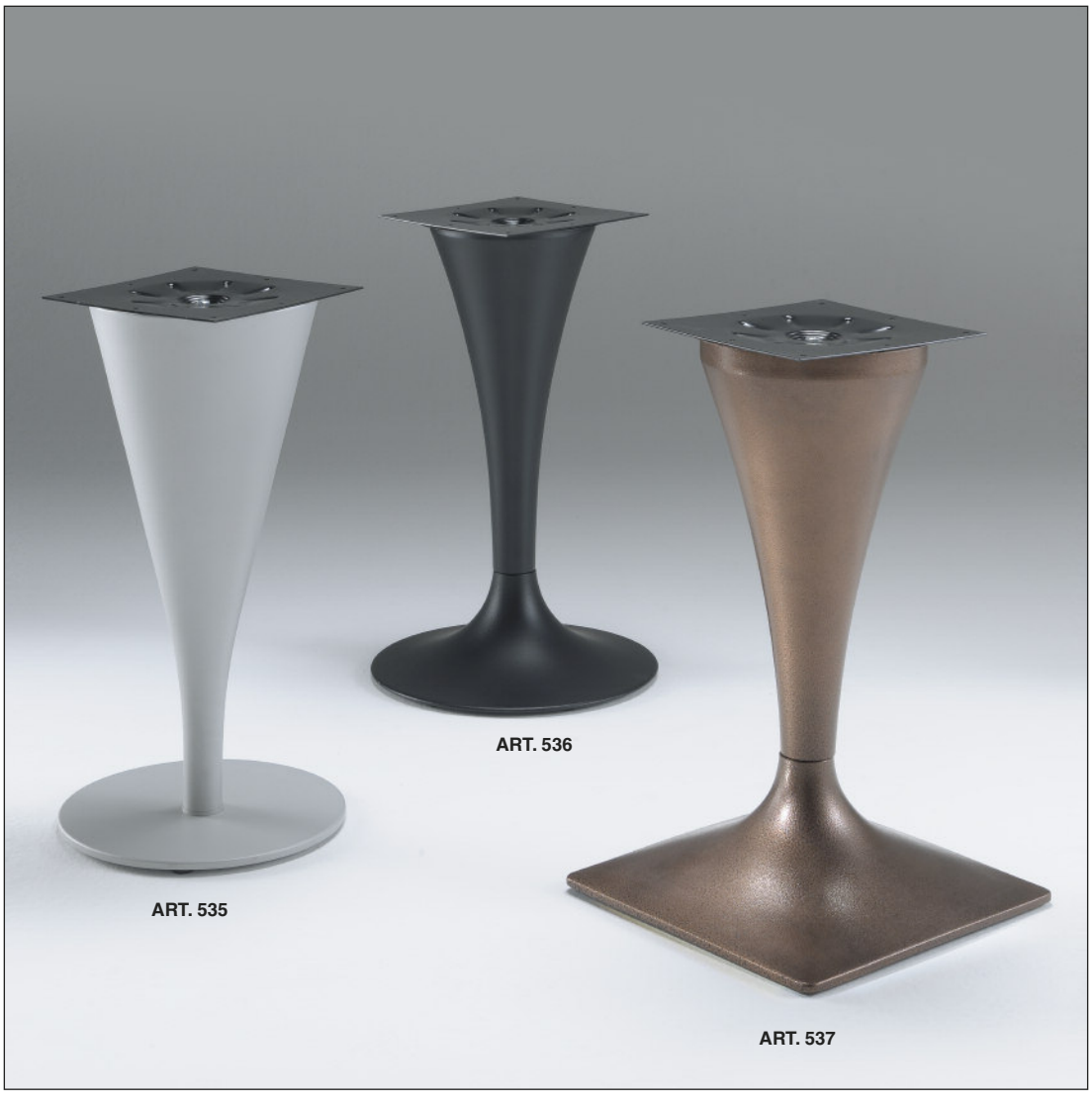

ART. 535

Basamento in acciaio Ø 400 mm.
Tubo acciaio conificato Ø 320 mm.
H totale 73 cm. Peso kg. 15.
Verniciata epossidica in tutti i colori.
Cromato - Nickel satinato.
Piastra di fissaggio al piano in acciaio stampato 300x300 mm.

Steel base Ø 400 mm.
Cone-shaped steel tube Ø 320 mm.
Total height 73 cm. Weight kg. 15.
Epoxy coated, all colours.
Chromed - Nickel satined.
Fixing plate, pressed steel 300x300 mm.

Base en acier Ø 400 mm.
Tube en acier en forme de cône Ø 320 mm.
Hauter totale 73 cm. Poids kg. 15.
Chrome - Nickel satinè - Laitonné.
Plaque de fixation en métal estampé 300x300 mm.

Gegossener Fussteil Ø 400 mm.
Kegelförmigen Stahlrohr Ø 320 mm.
Gesamtlaenge: 73 cm. Gewicht: kg. 15.
Epoxylackiert, alle Farben.
Verchromt - Nickel satiniert.
Gestanzte Befestigungsplatte aus Metall 300x300 mm.

ART. 536

Basamento in acciaio Ø 470 mm.
Tubo acciaio conificato Ø 255 mm.
H totale 73 cm. Peso kg. 17.
Verniciata epossidica in tutti i colori.
Cromato - Nickel satinato.
Piastra di fissaggio al piano in acciaio stampato 300x300 mm.

Steel base Ø 470 mm.
Cone-shaped steel tube Ø 255 mm.
Total height 73 cm. Weight kg. 17.
Epoxy coated, all colours.
Chromed - Nickel satined.
Fixing plate, pressed steel 300x300 mm.

Base en acier Ø 470 mm.
Tube en acier en forme de cône Ø 255 mm.
Hauter totale 73 cm. Poids kg. 17.
Chrome - Nickel satinè - Laitonné.
Plaque de fixation en métal estampé 300x300 mm.

Gegossener Fussteil Ø 470 mm.
Kegelförmigen Stahlrohr Ø 255 mm.
Gesamtlaenge: 73 cm. Gewicht: kg. 17.
Epoxylackiert, alle Farben.
Verchromt - Nickel satiniert.
Gestanzte Befestigungsplatte aus Metall 300x300 mm.

ART. 537

Basamento in acciaio 450x450 mm.
Tubo acciaio conificato Ø 330 mm.
H totale 73 cm. Peso kg. 20.
Verniciata epossidica in tutti i colori.
Cromato - Nickel satinato.
Piastra di fissaggio al piano in acciaio stampato 300x300 mm.

Steel base 450x450 mm.
Cone-shaped steel tube Ø 330 mm.
Total height 73 cm. Weight kg. 20.
Epoxy coated, all colours.
Chromed - Nickel satined.
Fixing plate, pressed steel 300x300 mm.

Base en acier 450x450 mm.
Tube en acier en forme de cône Ø 330 mm.
Hauter totale 73 cm. Poids kg. 20.
Chrome - Nickel satinè - Laitonné.
Plaque de fixation en métal estampé 300x300 mm.

Gegossener Fussteil 450x450 mm.
Kegelförmigen Stahlrohr Ø 330 mm.
Gesamtlaenge: 73 cm. Gewicht: kg. 20.
Epoxylackiert, alle Farben.
Verchromt - Nickel satiniert.
Gestanzte Befestigungsplatte aus Metall 300x300 mm.

MANART srl - 23876 MONTICELLO - FRAZ. CORTENUOVA (LC) ITALY - Via T. Moneta, 17 - Tel. 039.920.35.55 - 039.920.26.44 - Fax 039.920.28.01
www.manart.it e-mail: manart@manart.it

ART. 68

Basamento in ghisa Ø 420 mm.
Tubo acciaio Ø 76 mm.
H totale 73 cm. Peso kg. 15.
Verniciata epossidica in tutti i colori.
Fissaggio al piano con croce in ghisa.

Cast base Ø 420 mm.
Steel tube Ø 76 mm.
Total height 73 cm. Weight kg. 15.
Epoxy coated, all colours.
Fixing to the top with cast iron cross.

Base coulée 420 mm.
Tube acier Ø 76 mm.
Hauter totale 73 cm. Poids kg. 15.
Peinture époxide, toutes les couleurs.
Fixation à la base avec croix en fronte.

Gegossener Fussteil 420 mm.
Stahlrohr Ø 76 mm.
Gesamtlaenge: 73 cm. Gewicht: kg. 15.
Epoxylackiert, alle Farben.
Befestigung an der Platte mit
Gusseisenkreuz.

ART. 55 / H 110

Basamento in acciaio Ø 450 mm.
Tubo acciaio Ø 80 mm.
H totale 110 cm. Peso kg. 8*.
Verniciata epossidica in tutti i colori.
Cromato - Nickel satinato - Ottonato.
Piastra di fissaggio al piano in acciaio
stampato 30x30 cm.

Steel base Ø 450 mm.
Steel tube Ø 80 mm.
Total height 110 cm. Weight kg. 8*.
Epoxy coated, all colours.
Chromed - Nickel satined - Brassed.
Fixing plate, pressed steel 30x30 cm.

Base en acier Ø 450 mm.
Tube acier Ø 80 mm.
Hauter totale 110 cm. Poids kg. 8*.
Peinture époxide, toutes les couleurs.
Chrome - Nickel satinè - Laitonné.
Plaque de fixation en métal estampé
30x30 cm.

Fussteil aus Stahl Ø 450 mm.
Stahlrohr Ø 80 mm.
Gesamtlaenge: 110 cm. Gewicht: kg. 8*.
Epoxylackiert, alle Farben.
Verchromt - Nickel satiniert - Vermessingt.
Gestanzte Befestigungsplatte aus Metall
30x30 cm.

ART. 55

Basamento in acciaio Ø 450 mm.
Tubo acciaio Ø 80 mm.
H totale 73 cm. Peso kg. 7*.
Verniciata epossidica in tutti i colori.
Cromato - Nickel satinato - Ottonato.
Piastra di fissaggio al piano in acciaio
stampato 30x30 cm.

Steel base Ø 450 mm.
Steel tube Ø 80 mm.
Total height 73 cm. Weight kg. 7*.
Epoxy coated, all colours.
Chromed - Nickel satined - Brassed.
Fixing plate, pressed steel 30x30 cm.

Base en acier Ø 450 mm.
Tube acier Ø 80 mm.
Hauter totale 73 cm. Poids kg. 7*.
Peinture époxide, toutes les couleurs.
Chrome - Nickel satinè - Laitonné.
Plaque de fixation en métal estampé
30x30 cm.

Fussteil aus Stahl Ø 450 mm.
Stahlrohr Ø 80 mm.
Gesamtlaenge: 73 cm. Gewicht: kg. 7*.
Epoxylackiert, alle Farben.
Verchromt - Nickel satiniert - Vermessingt.
Gestanzte Befestigungsplatte aus Metall
30x30 cm.

* Zavorra supplementare su richiesta
* Supplementary counterweight upon request * Contrepoids supplémentaire sur demande * Zusatzballast auf Anfrage

ART. 64

Basamento in ghisa Ø 400 mm.
Tubo acciaio Ø 76 mm.
H totale 73 cm. Peso kg. 17,5.
Verniciata epossidica in tutti i colori.
Fissaggio al piano con croce in ghisa.

Cast base Ø 400 mm.
Steel tube Ø 76 mm.
Total height 73 cm. Weight kg. 17,5.
Epoxy coated, all colours.
Fixing to the top with cast iron cross.

Base coulée Ø 400 mm.
Tube acier Ø 76 mm.
Hauter totale 73 cm. Poids kg. 17,5.
Peinture époxide, toutes les couleurs.
Fixation à la base avec croix en fronte.

Gegossener Fussteil Ø 400 mm.
Stahlrohr Ø 76 mm.
Gesamtlaenge: 73 cm. Gewicht: kg. 17,5.
Epoxylackiert, alle Farben.
Befestigungs an del Platte mit
Gusseisenkreuz.

ART. 65

Basamento in ghisa 400 x 400 mm.
Tubo acciaio 80x80 mm.
H totale 73 cm. Peso kg. 22.
Verniciata epossidica in tutti i colori.
Fissaggio al piano con croce in ghisa.

Cast base 400 x 400 mm.
Steel tube 80x80 mm.
Total height 73 cm. Weight kg. 22.
Epoxy coated, all colours.
Fixing to the top with cast iron cross.

Base coulée 400 x 400 mm.
Tube acier 80x80 mm.
Hauter totale 73 cm. Poids kg. 22.
Peinture époxide, toutes les couleurs.
Fixation à la base avec croix en fronte.

Gegossener Fussteil 400 x 400 mm.
Stahlrohr 80x80 mm.
Gesamtlaenge: 73 cm. Gewicht: kg. 22.
Epoxylackiert, alle Farben.
Befestigungs an del Platte mit
Gusseisenkreuz.

MANART srl - 23876 MONTICELLO - FRAZ. CORTENUOVA (LC) ITALY - Via T. Moneta, 17 - Tel. 039.920.35.55 - 039.920.26.44 - Fax 039.920.28.01
www.manart.it e-mail: manart@manart.it

ART. 59

Coppia basamenti in ghisa 635x90 mm.
Tubo acciaio Ø 76 mm.
H totale 73 cm.
Peso kg. 20.
Verniciata epossidica in tutti i colori.
Fissaggio al piano con croce in ghisa.

Pair of cast bases 635x90 mm.
Steel tube Ø 76 mm.
Total height 73 cm.
Weight kg. 20.
Epoxy coated, all colours.
Fixing to the top with cast iron cross.

Paire de bases coulée 635x90 mm.
Tube acier Ø 76 mm.
Hauter totale 73 cm.
Poids kg. 20.
Peinture époxide, toutes les couleurs.
Fixation a la base avec croix en fonte.

Paar von Gegossener Fussteil 635x90 mm.
Stahlrohr Ø 76 mm.
Gesamtlaenge: 73 cm.
Gewicht: kg. 20.
Epoxylackiert, alle Farben.
Befestigung an der Platte
mit Gusseisenkreuz.

ART. 67

Basamento in ghisa Ø 400 mm.
Tubo ghisa Ø 80 mm.
H totale 73 cm.
Peso kg. 22,5.
Verniciata epossidica in tutti i colori.
Fissaggio al piano con croce in ghisa.

Cast base Ø 400 mm.
Cast tube Ø 80 mm.
Total height 73 cm.
Weight kg. 22,5.
Epoxy coated, all colours.
Fixing to the top with cast iron cross.

Base coulée Ø 400 mm.
Tube coulée Ø 80 mm.
Hauter totale 73 cm.
Poids kg. 22,5.
Peinture époxide, toutes les couleurs.
Fixation a la base avec croix en fonte.

Gegossener Fussteil Ø 400 mm.
Gegossener Rohr Ø 80 mm.
Gesamtlaenge: 73 cm.
Gewicht: kg. 22,5.
Epoxylackiert, alle Farben.
Befestigung an der Platte
mit Gusseisenkreuz.

ART. 69

Basamento in ghisa 635 x 635 mm.
Tubo acciaio Ø 76 mm.
H totale 73 cm.
Peso kg. 15.
Verniciata epossidica in tutti i colori.
Fissaggio al piano con croce in ghisa.

Cast base 635 x 635 mm.
Steel tube Ø 76 mm.
Total height 73 cm.
Weight kg. 15.
Epoxy coated, all colours.
Fixing to the top with cast iron cross.

Base coulée 635 x 635 mm.
Tube acier Ø 76 mm.
Hauter totale 73 cm.
Poids kg. 15.
Peinture époxide, toutes les couleurs.
Fixation à la base avec croix en fonte.

Gegossener Fussteil 635 x 635 mm.
Stahlrohr Ø 76 mm.
Gesamtlaenge: 73 cm.
Gewicht: kg. 15.
Epoxylackiert, alle Farben.
Befestigung an der Platte
mit Gusseisenkreuz.

ART. 70

Basamento in ghisa Ø 500 mm.
Tubo acciaio Ø 76 mm.
H totale 73 cm.
Peso kg. 12.
Verniciata epossidica in tutti i colori.
Fissaggio al piano con croce in ghisa.

Cast base Ø 500 mm.
Steel tube Ø 76 mm.
Total height 73 cm.
Weight kg. 12.
Epoxy coated, all colours.
Fixing to the top with cast iron cross.

Base coulée Ø 500 mm.
Tube acier Ø 76 mm.
Hauter totale 73 cm.
Poids kg. 12.
Peinture époxide, toutes les couleurs.
Fixation à la base avec croix en fonte.

Gegossener Fussteil Ø 500 mm.
Stahlrohr Ø 76 mm.
Gesamtlaenge: 73 cm.
Gewicht: kg. 12.
Epoxylackiert, alle Farben.
Befestigung an der Platte
mit Gusseisenkreuz.

MANART srl - 23876 MONTICELLO - FRAZ. CORTENUOVA (LC) ITALY - Via T. Moneta, 17 - Tel. 039.920.35.55 - 039.920.26.44 - Fax 039.920.28.01
www.manart.it e-mail: manart@manart.it

ART. 71

Basamento in ghisa 420 x 420 mm.
H totale 73 cm.
Peso kg. 18.
Verniciata epossidica in tutti i colori.

Cast base 420 x 420 mm.
Total height 73 cm.
Weight kg. 18.
Epoxy coated, all colours.

Base coulée 420 x 420 mm.
Hauter totale 73 cm.
Poids kg. 18.
Peinture époxide, toutes les couleurs.

Gegossener Fussteil 420 x 420 mm.
Gesamtlaenge: 73 cm.
Gewicht: kg. 18.
Epoxylackiert, alle Farben.

ART. 72

Basamento in ghisa Ø 560 mm.
H totale 73 cm.
Peso kg. 13,5.
Verniciata epossidica in tutti i colori.

Cast base Ø 560 mm.
Total height 73 cm.
Weight kg. 13,5.
Epoxy coated, all colours.

Base coulée Ø 560 mm.
Hauter totale 73 cm.
Poids kg. 13,5.
Peinture époxide, toutes les couleurs.

Gegossener Fussteil Ø 560 mm.
Gesamtlaenge: 73 cm.
Gewicht: kg. 13,5.
Epoxylackiert, alle Farben.

ART. 547

Basamento in acciaio 400x400 mm.
Tubo acciaio Ø 80 mm.
H totale 73 cm. Peso kg. 14,80.
Verniciata epossidica in tutti i colori.
Piastra di fissaggio al piano in acciaio stampato 300x300 mm.

Steel base 400x400 mm.
Steel tube Ø 80 mm.
Total height 73 cm. Weight kg. 14,80.
Epoxy coated, all colours.
Fixing plate, pressed steel 300x300 mm.

Base en acier 400x400 mm.
Tube acier Ø 80 mm.
Hauter totale 73 cm. Poids kg. 14,80.
Peinture époxide, toutes les couleurs.
Plaque de fixation en métal estampé 300x300 mm.

Fussteil aus Stahl 400x400 mm.
Stahlrohr Ø 80 mm.
Gesamtlaenge: 73 cm. Gewicht: kg. 14,80.
Epoxylackiert, alle Farben.
Gestanzte Befestigungsplatte aus Metall 300x300 mm.

ART. 548

Basamento in acciaio 500x500 mm.
Tubo acciaio Ø 80 mm.
H totale 73 cm. Peso kg. 23,20.
Verniciata epossidica in tutti i colori.
Piastra di fissaggio al piano in acciaio stampato 400x400 mm.

Steel base 500x500 mm.
Steel tube Ø 80 mm.
Total height 73 cm. Weight kg. 23,20.
Epoxy coated, all colours.
Fixing plate, pressed steel 400x400 mm.

Base en acier 500x500 mm.
Tube acier Ø 80 mm.
Hauter totale 73 cm. Poids kg. 23,20.
Peinture époxide, toutes les couleurs.
Plaque de fixation en métal estampé 400x400 mm.

Fussteil aus Stahl 500x500 mm.
Stahlrohr Ø 80 mm.
Gesamtlaenge: 73 cm. Gewicht: kg. 23,20.
Epoxylackiert, alle Farben.
Gestanzte Befestigungsplatte aus Metall 400x400 mm.

MANART srl - 23876 MONTICELLO - FRAZ. CORTENUOVA (LC) ITALY - Via T. Moneta, 17 - Tel. 039.920.35.55 - 039.920.26.44 - Fax 039.920.28.01
www.manart.it e-mail: manart@manart.it

ART. 76

Basamento in ghisa Ø 460 mm.
Tubo acciaio Ø 180 mm.
H totale 73 cm.
Peso kg. 16.
Verniciata epossidica in tutti i colori.
Fissaggio al piano con croce in ghisa.

Cast base Ø 460 mm.
Steel tube Ø 180 mm.
Total height 73 cm.
Weight kg. 16.
Epoxy coated, all colours.
Fixing to the top with cast iron cross.

Base coulée Ø 460 mm.
Tube acier Ø 180 mm.
Hauter totale 73 cm.
Poids kg. 16.
Peinture époxide, toutes les couleurs.
Fixation à la base avec croix en fonte.

Gegossener Fussteil Ø 460 mm.
Stahlrohr Ø 180 mm.
Gesamtlaenge: 73 cm.
Gewicht: kg. 16.
Epoxylackiert, alle Farben.
Befestigung an der Platte
mit Gusseisenkreuz.

ART. 77

Basamento in ghisa Ø 560 mm.
Tubo acciaio Ø 180 mm.
H totale 73 cm.
Peso kg. 25.
Verniciata epossidica in tutti i colori.
Fissaggio al piano con croce in ghisa.

Cast base Ø 560 mm.
Steel tube Ø 180 mm.
Total height 73 cm.
Weight kg. 25.
Epoxy coated, all colours.
Fixing to the top with cast iron cross.

Base coulée Ø 560 mm.
Tube acier Ø 180 mm.
Hauter totale 73 cm.
Poids kg. 25.
Peinture époxide, toutes les couleurs.
Fixation à la base avec croix en fonte.

Gegossener Fussteil Ø 560 mm.
Stahlrohr Ø 180 mm.
Gesamtlaenge: 73 cm.
Gewicht: kg. 25.
Epoxylackiert, alle Farben.
Befestigung an der Platte
mit Gusseisenkreuz.

ART. 79

Basamento in ghisa Ø 600 mm.
Tubo acciaio Ø 76 mm.
H totale 73 cm.
Peso kg. 29.
Verniciata epossidica in tutti i colori.
Fissaggio al piano con croce in ghisa.

Cast base Ø 600 mm.
Steel tube Ø 76 mm.
Total height 73 cm.
Weight kg. 29.
Epoxy coated, all colours.
Fixing to the top with cast iron cross.

Base coulée Ø 600 mm.
Tube acier Ø 76 mm.
Hauter totale 73 cm.
Poids kg. 29.
Peinture époxide, toutes les couleurs.
Fixation à la base avec croix en fonte.

Gegossener Fussteil Ø 600 mm.
Stahlrohr Ø 76 mm.
Gesamtlaenge: 73 cm.
Gewicht: kg. 29.
Epoxylackiert, alle Farben.
Befestigung an der Platte
mit Gusseisenkreuz.

ART. 78

Basamento in ghisa 400x400 mm.
Tubo acciaio Ø 180 mm.
H totale 73 cm.
Peso kg. 20.
Verniciata epossidica in tutti i colori.
Fissaggio al piano con croce in ghisa.

Cast base 400x400 mm.
Steel tube Ø 180 mm.
Total height 73 cm.
Weight kg. 20.
Epoxy coated, all colours.
Fixing to the top with cast iron cross.

Base coulée 400x400 mm.
Tube acier Ø 180 mm.
Hauter totale 73 cm.
Poids kg. 20.
Peinture époxide, toutes les couleurs.
Fixation à la base avec croix en fonte.

Gegossener Fussteil 400x400 mm.
Stahlrohr Ø 180 mm.
Gesamtlaenge: 73 cm.
Gewicht: kg. 20.
Epoxylackiert, alle Farben.
Befestigung an der Platte
mit Gusseisenkreuz.

MANART srl - 23876 MONTICELLO - FRAZ. CORTENUOVA (LC) ITALY - Via T. Moneta, 17 - Tel. 039.920.35.55 - 039.920.26.44 - Fax 039.920.28.01
www.manart.it e-mail: manart@manart.it

ART. 99

FUSTO PER TAVOLI SMONTABILE

KNOCK-DOWN TABLE FRAME

CHÂSSIS DÉMONTABLE POUR TABLES

DEMONTIERBARES TISCHGESTELL

ALTEZZA - HEIGHT - HAUTÊR - HÖHE

Standard 73 cm.
Standard size 73 cm.
Standard taille 73 cm.
Standard Mass 73 cm.

DIMENSIONI - DIMENSIONS - DIMENSIONS - MASSE

120 X 80 cm.
140 X 80 cm.
160 X 80 cm.

MATERIALE - MATERIAL - MATIÉRE - MATERIAL

Gambe: tubo 50x50 mm in acciaio. Traverse: tubo 60x20 mm in acciaio.
Legs: steel tube 50x50 mm. Crossbars: steel tube 60x20 mm.
Pieds: tube 50x50 mm en acier. Traverses: tube 60x20 mm en acier.
Tischbeine: stahlrohr 50x50 mm. Querträger: stahlrohr 60x20 mm.

FINITURE - FINISHES - EXECUTIONS - AUSFUEHRUNGEN

Veniciato: alluminio - satinato
Epoxy painting: aluminium - satined
Peinture Epoxide: aluminium - satine
Epoxy Lackierung: aluminium - satiniert

ART. 508

Basamento in acciaio Ø 400 mm.
Tubo acciaio Ø 60 mm.
Altezza regolabile 65-110 cm. Peso kg. 8.
Verniciata epossidica in tutti i colori.
Cromato - Nickel satinato - Ottonato.
Piastra di fissaggio in acciaio Ø 65 mm per applicazioni su vetro e cristallo.

Steel base Ø 400 mm. Steel tube Ø 60 mm.
Adjustable height 65-110 cm. Weight kg. 8.
Epoxy coated, all colours.
Chromed - Nickel satined - Brassed.
Steel assembly plate Ø 65 mm for applications on glass and crystal.

Base en acier Ø 400 mm.
Tube acier Ø 60 mm.
Hauter reglable 65-110 cm. Poids kg. 8.
Peinture époxide, toutes les couleurs.
Chrome - Nickel satinè - Laitonné.
Plaque de fixation en acier Ø 65 mm pour applications sur verre ou cristal.

Fussteil aus Stahl Ø 400 mm.
Stahlrohr Ø 60 mm.
Höhe 65-110 cm: 73 cm. Gewicht: kg. 8.
Epoxylackiert, alle Farben.
Verchromt - Nickel satiniert - Vermessingt.
Befestigungsplatte aus Stahl (Ø 65 mm) zum Anbringen auf Glas und Kristallglas.

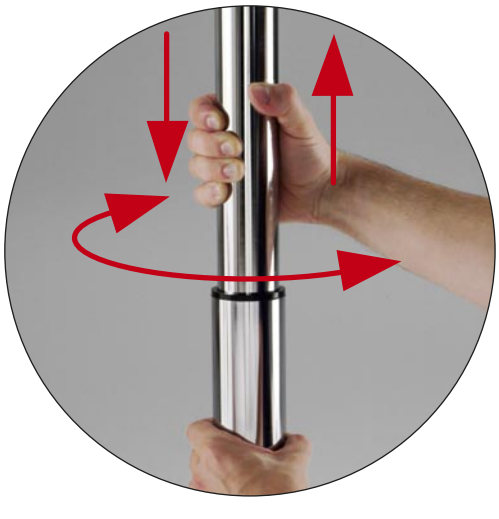

ART. 509

Basamento in acciaio Ø 400 mm.
Tubo acciaio Ø 60 mm.
Altezza regolabile 65-110 cm. Peso kg. 8.
Verniciata epossidica in tutti i colori.
Cromato - Nickel satinato - Ottonato.
Piastra di fissaggio al piano in acciaio stampato 30x30 cm.

Steel base Ø 400 mm. Steel tube Ø 60 mm.
Adjustable height 65-110 cm. Weight kg. 8.
Epoxy coated, all colours.
Chromed - Nickel satined - Brassed.
Fixing plate, pressed steel 30x30 cm.

Base en acier Ø 400 mm.
Tube acier Ø 60 mm.
Hauteur réglable 65 -110 cm. Poids kg. 8.
Peinture époxide, toutes les couleurs.
Chrome - Nickel satinè - Laitonné.
Plaque de fixation en métal estampé 30x30 cm.

Fussteil aus Stahl Ø 400 mm.
Stahlrohr Ø 60 mm.
Höhenverstellbar (65-110 cm).
Gewicht: kg. 8.
Epoxylackiert, alle Farben.
Verchromt - Nickel satiniert - Vermessingt.
Gestanzte Befestigungsplatte aus Metall 30x30 cm.

MANART srl - 23876 MONTICELLO - FRAZ. CORTENUOVA (LC) ITALY - Via T. Moneta, 17 - Tel. 039.920.35.55 - 039.920.26.44 - Fax 039.920.28.01
www.manart.it e-mail: manart@manart.it

Piastra in acciaio 300x300 mm sp.3 mm kg. 2,1
Steel plate 300x300 mm sp. 3 kg. 2,10
Platine en acier 300x300 mm sp. 3 mm kg. 2,10
Stahlplatte 300x300 mm sp. 3 kg. 2,10

Piastra in acciaio 400x400mm sp.4 mm kg. 5
Steel plate 400x400 mm sp. 3 kg. 5
Platine en acier 400x400 mm sp. 3 mm kg. 5
Stahlplatte 400x400 mm sp. 3 kg. 5

Disco zavorra Ø410 mm sp. 8 mm kg. 8
Extra weight Ø410 mm sp. 8 mm kg. 8
Contrepoids Ø410 mm sp. 8 kg. 8
Zusatzballast Ø410 mm sp. 8 mm kg. 8

Disco zavorra Ø390 mm sp. 8 mm kg. 8
Extra weight Ø390 mm sp. 8 mm kg. 8
Contrepoids Ø390 mm sp. 8 kg. 8
Zusatzballast Ø390 mm sp. 8 mm kg. 8

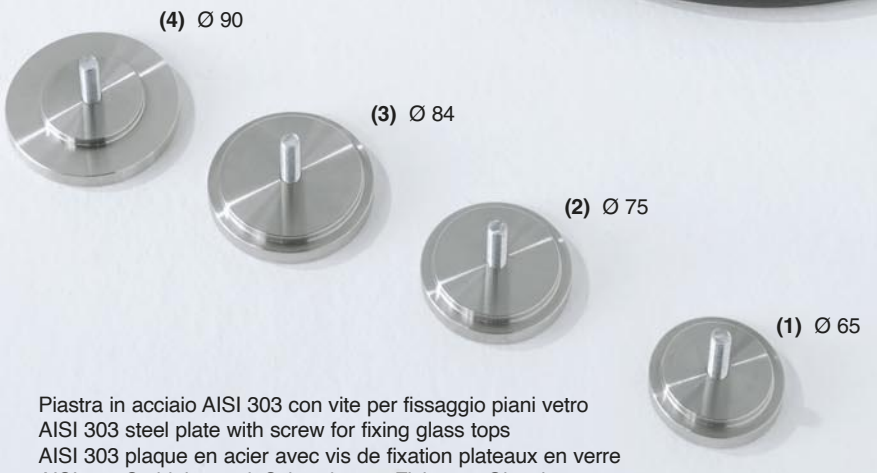

Piastra in acciaio AISI 303 con vite per fissaggio piani vetro
AISI 303 steel plate with screw for fixing glass tops
AISI 303 plaque en acier avec vis de fixation plateaux en verre
AISI 303 Stahlplatte mit Schraube zur Fixierung Glasplatten

MANART

Art.58

SOSTEGNI PIEGHEVOLI PER TAVOLI

Folding table support
Supports pour tables pliables
Faltbares Tischgestell

ART. 58

Sostegni pieghevoli per tavoli
Folding table support
Supports pour tables pliables
faltbares Tischgestell

ALTEZZA - HEIGHT - HAUTÊR - HÖHE

Standard 71 cm. Terminale regolabile max 1 cm.
Disponibile a richiesta per quantità.

Standard size 71 cm. Adjustable leg max 1 cm.
Available for quantities on request.

Standard taille 71 cm. Pied reglable max 1 cm.
Disponible sur demande pour quantitè.

Standard Mass 71 cm. Verstelbaresbein max 1 cm.
Fuer Mengen auf Ersuchen verfuegbar.

FINITURE - FINISHES - EXECUTIONS - AUSFUEHAUNGEN

Verniciatura epossidica tutti i colori.
Ottonato - Nickel satinato - Alluminio - Cromato.

Epoxy painting every colour.
Brassed - Nickel satined - Aluminium - Chromed.

Peinture epoxide chaque couleur.
Laitonné - Nickel satiné - Aluminium - Chrome.

Epoxy Lackierung jader Farbe.
Vermessingt - Nickel satiniert - Aluminium - Verchromt.

COLORI E TIPI DI PIANI DISPONIBILI STANDARD - STANDARD AVAILABLE COLOURS AND TOPS - COLORIS ET TYPES DE PLATEAUX DISPONIBLES DANS LA VERSION STANDARD - VERFÜGBARE STANDARD-FARBEN UND -PLATTEN.

- Piano 125 x 80 cm. Tinte legno in nobilitato con bordo gomma nero sp. 25 mm.
- Piano 125 x 80 cm. Tinte legno in laminato con bordo gomma nella stessa tinta sp. 27 mm.

- 125 x 80 cm top. Veneered wood, wood colours with black rubber edge, 25 mm thick.
- 125 x 80 cm top. Laminated wood, wood colours with same colour rubber edge, 27 mm thick.

- Plateau 125 x 80 cm. Replaqué teintes bois avec bord en caoutchouc noir ép. 25 mm.
- Plateau 125 x 80 cm. Laminé teintes bois avec bord en caoutchouc dans la même teinte ép. 27 mm.

- 125 x 80 cm Platte. Beschichtete Spannplatte, Holzfarben mit schwarzem Gummirand, 25 mm stark.
- 125 x 80 cm Platte. Laminat, Holzfarben mit gleichfarbigem Gummirand, 27 mm stark.

DIMENSIONI MINIME DEL PIANO - MINIMUM TOP DIMENSIONS - DIMENSIONS MINIMUMS DU PLATEAU - MINDESTMASSE DER PLATTE.

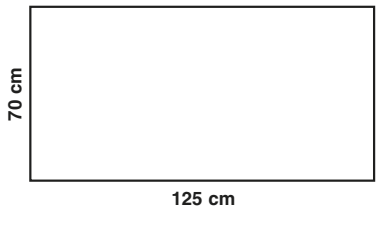

DIMENSIONI DEI SOSTEGNI - SUPPORTS DIMENSIONS - DIMENSIONS DES SUPPORTS - MASSE DER STÜTZEN.

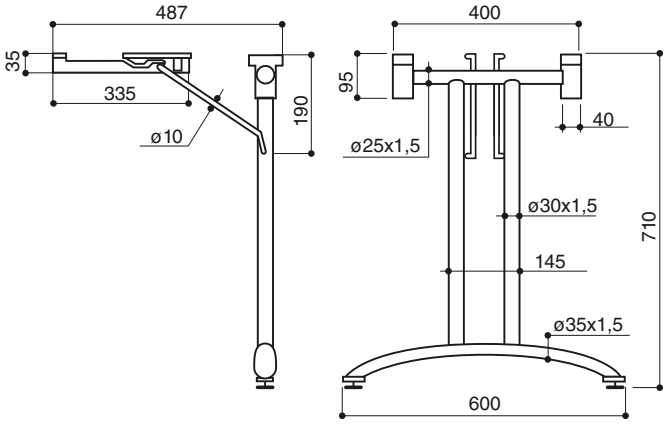

MANART srl - 23876 MONTICELLO - FRAZ. CORTENUOVA (LC) ITALY - Via T. Moneta, 17 - Tel. 039.920.35.55 - 039.920.26.44 - Fax 039.920.28.01
www.manart.it e-mail: manart@manart.it

MANART

Art.75

SOSTEGNI PIEGHEVOLI PER TAVOLI

Folding table support
Supports pour tables pliables
Faltbares Tischgestell

ART. 75

Sostegni pieghevoli per tavoli
Folding table support
Supports pour tables pliables
faltbares Tischgestell

ALTEZZA - HEIGHT - HAUTÊR - HÖHE

Standard 71 cm. Terminale regolabile max 1 cm.
Disponibile a richiesta per quantità.

Standard size 71 cm. Adjustable leg max 1 cm.
Available for quantities on request.

Standard taille 71 cm. Pied reglable max 1 cm.
Disponible sur demande pour quantitè.

Standard Mass 71 cm. Verstelbaresbein max 1 cm.
Fuer Mengen auf Ersuchen verfuegbar.

FINITURE - FINISHES - EXECUTIONS - AUSFUEHAUNGEN

Verniciatura epossidica tutti i colori.
Ottonato - Nickel satinato - Alluminio - Cromato.

Epoxy painting every colour.
Brassed - Nickel satined - Aluminium - Chromed.

Peinture epoxide chaque couleur.
Laitonné - Nickel satiné - Aluminium - Chrome.

Epoxy Lackierung jader Farbe.
Vermessingt - Nickel satiniert - Aluminium - Verchromt.

COLORI E TIPI DI PIANI DISPONIBILI STANDARD - STANDARD AVAILABLE COLOURS AND TOPS - COLORIS ET TYPES DE PLATEAUX DISPONIBLES DANS LA VERSION STANDARD - VERFÜGBARE STANDARD-FARBEN UND - PLATTEN.

- Piano 125 x 80 cm. Tinte legno in nobilitato con bordo gomma nero sp. 25 mm.
- Piano 125 x 80 cm. Tinte legno in laminato con bordo gomma nella stessa tinta sp. 27 mm.

- 125 x 80 cm top. Veneered wood, wood colours with black rubber edge, 25 mm thick.
- 125 x 80 cm top. Laminated wood, wood colours with same colour rubber edge, 27 mm thick.

- Plateau 125 x 80 cm. Replaqué teintes bois avec bord en caoutchouc noir ép. 25 mm.
- Plateau 125 x 80 cm. Laminé teintes bois avec bord en caoutchouc dans la même teinte ép. 27 mm.

- 125 x 80 cm Platte. Beschichtete Spannplatte, Holzfarben mit schwarzem Gummirand, 25 mm stark.
- 125 x 80 cm Platte. Laminat, Holzfarben mit gleichfarbigem Gummirand, 27 mm stark.

DIMENSIONI MINIME DEL PIANO - MINIMUM TOP DIMENSIONS - DIMENSIONS MINIMUMS DU PLATEAU - MINDESTMASSE DER PLATTE.

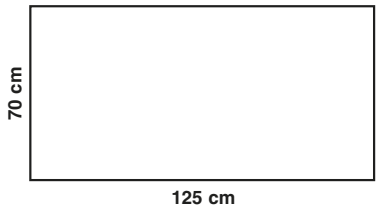

DIMENSIONI DEI SOSTEGNI - SUPPORTS DIMENSIONS - DIMENSIONS DES SUPPORTS - MASSE DER STÜTZEN.

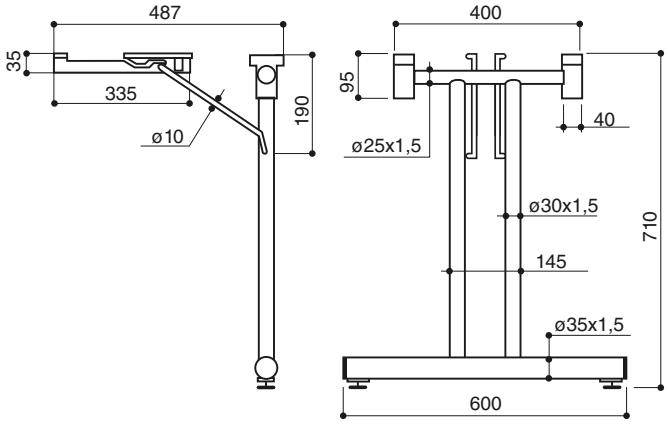

MANART srl - 23876 MONTICELLO - FRAZ. CORTENUOVA (LC) ITALY - Via T. Moneta, 17 - Tel. 039.920.35.55 - 039.920.26.44 - Fax 039.920.28.01
www.manart.it e-mail: manart@manart.it

MANART

Art.85

SOSTEGNI PIEGHEVOLI PER TAVOLI

Folding table support
Supports pour tables pliables
Faltbares Tischgestell

ART. 85

Sostegni pieghevoli per tavoli
Folding table support
Supports pour tables pliables
faltbares Tischgestell

ALTEZZA - HEIGHT - HAUTÊR - HÖHE

Standard 71 cm. Terminale regolabile max 1 cm.
Disponibile a richiesta per quantità.

Standard size 71 cm. Adjustable leg max 1 cm.
Available for quantities on request.

Standard taille 71 cm. Pied reglable max 1 cm.
Disponible sur demande pour quantitè.

Standard Mass 71 cm. Verstelbaresbein max 1 cm.
Fuer Mengen auf Ersuchen verfuegbar.

FINITURE - FINISHES - EXECUTIONS - AUSFUEHAUNGEN

Verniciatura epossidica tutti i colori.
Ottonato - Nickel satinato - Alluminio - Cromato.

Epoxy painting every colour.
Brassed - Nickel satined - Aluminium - Chromed.

Peinture epoxide chaque couleur.
Laitonné - Nickel satiné - Aluminium - Chrome.

Epoxy Lackierung jader Farbe.
Vermessingt - Nickel satiniert - Aluminium - Verchromt.

COLORI E TIPI DI PIANI DISPONIBILI STANDARD - STANDARD AVAILABLE COLOURS AND TOPS - COLORIS ET TYPES DE PLATEAUX DISPONIBLES DANS LA VERSION STANDARD - VERFÜGBARE STANDARD-FARBEN UND -PLATTEN.

- Piano 125 x 80 cm. Tinte legno in nobilitato con bordo gomma nero sp. 25 mm.
- Piano 125 x 80 cm. Tinte legno in laminato con bordo gomma nella stessa tinta sp. 27 mm.

- 125 x 80 cm top. Veneered wood, wood colours with black rubber edge, 25 mm thick.
- 125 x 80 cm top. Laminated wood, wood colours with same colour rubber edge, 27 mm thick.

- Plateau 125 x 80 cm. Replaqué teintes bois avec bord en caoutchouc noir ép. 25 mm.
- Plateau 125 x 80 cm. Laminé teintes bois avec bord en caoutchouc dans la même teinte ép. 27 mm.

- 125 x 80 cm Platte. Beschichtete Spannplatte, Holzfarben mit schwarzem Gummirand, 25 mm stark.
- 125 x 80 cm Platte. Laminat, Holzfarben mit gleichfarbigem Gummirand, 27 mm stark.

DIMENSIONI MINIME DEL PIANO - MINIMUM TOP DIMENSIONS - DIMENSIONS MINIMUMS DU PLATEAU - MINDESTMASSE DER PLATTE.

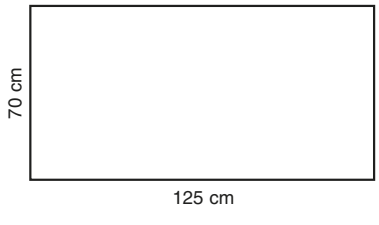

DIMENSIONI DEI SOSTEGNI - SUPPORTS DIMENSIONS - DIMENSIONS DES SUPPORTS - MASSE DER STÜTZEN.

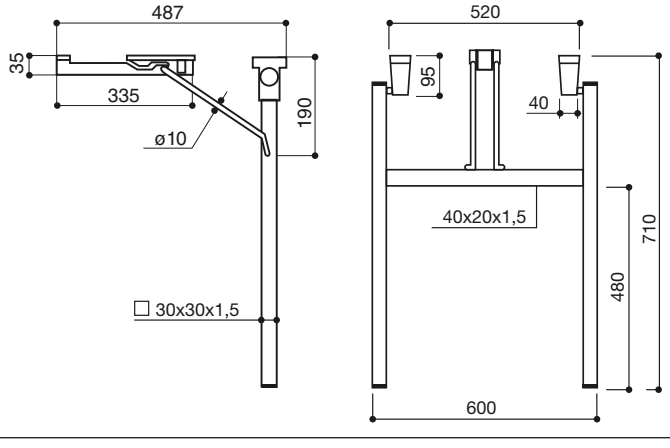

MANART srl - 23876 MONTICELLO - FRAZ. CORTENUOVA (LC) ITALY - Via T. Moneta, 17 - Tel. 039.920.35.55 - 039.920.26.44 - Fax 039.920.28.01
www.manart.it e-mail: manart@manart.it

MANART

Art.95

SOSTEGNI PIEGHEVOLI PER TAVOLI

Folding table support

Supports pour tables pliables

Faltbares Tischgestell

ART. 95

Sostegni pieghevoli per tavoli
Folding table support
Supports pour tables pliables
faltbares Tischgestell

ALTEZZA - HEIGHT - HAUTÊR - HÖHE

Standard 71 cm. Terminale regolabile max 1 cm.
Disponibile a richiesta per quantità.

Standard size 71 cm. Adjustable leg max 1 cm.
Available for quantities on request.

Standard taille 71 cm. Pied reglable max 1 cm.
Disponible sur demande pour quantitè.

Standard Mass 71 cm. Verstelbaresbein max 1 cm.
Fuer Mengen auf Ersuchen verfuegbar.

FINITURE - FINISHES - EXECUTIONS - AUSFUEHAUNGEN

Verniciatura epossidica tutti i colori.
Ottonato - Nickel satinato - Alluminio - Cromato.

Epoxy painting every colour.
Brassed - Nickel satined - Aluminium - Chromed.

Peinture epoxide chaque couleur.
Laitonné - Nickel satiné - Aluminium - Chrome.

Epoxy Lackierung jader Farbe.
Vermessingt - Nickel satiniert - Aluminium - Verchromt.

COLORI E TIPI DI PIANI DISPONIBILI STANDARD - STANDARD AVAILABLE COLOURS AND TOPS - COLORIS ET TYPES DE PLATEAUX DISPONIBLES DANS LA VERSION STANDARD - VERFÜGBARE STANDARD-FARBEN UND -PLATTEN.

- Piano 125 x 80 cm. Tinte legno in nobilitato con bordo gomma nero sp. 25 mm.
- Piano 125 x 80 cm. Tinte legno in laminato con bordo gomma nella stessa tinta sp. 27 mm.

- 125 x 80 cm top. Veneered wood, wood colours with black rubber edge, 25 mm thick.
- 125 x 80 cm top. Laminated wood, wood colours with same colour rubber edge, 27 mm thick.

- Plateau 125 x 80 cm. Replaqué teintes bois avec bord en caoutchouc noir ép. 25 mm.
- Plateau 125 x 80 cm. Laminé teintes bois avec bord en caoutchouc dans la même teinte ép. 27 mm.

- 125 x 80 cm Platte. Beschichtete Spannplatte, Holzfarben mit schwarzem Gummirand, 25 mm stark.
- 125 x 80 cm Platte. Laminat, Holzfarben mit gleichfarbigem Gummirand, 27 mm stark.

DIMENSIONI MINIME DEL PIANO - MINIMUM TOP DIMENSIONS - DIMENSIONS MINIMUMS DU PLATEAU - MINDESTMASSE DER PLATTE.

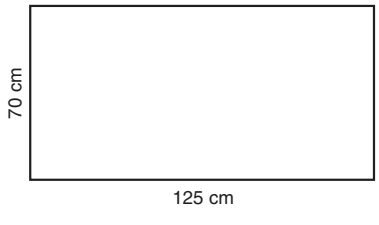

DIMENSIONI DEI SOSTEGNI - SUPPORTS DIMENSIONS - DIMENSIONS DES SUPPORTS - MASSE DER STÜTZEN.

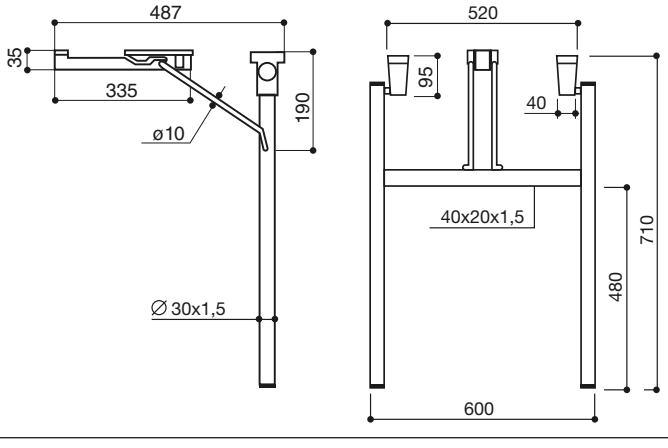

MANART srl - 23876 MONTICELLO - FRAZ. CORTENUOVA (LC) ITALY - Via T. Moneta, 17 - Tel. 039.920.35.55 - 039.920.26.44 - Fax 039.920.28.01
www.manart.it e-mail: manart@manart.it

MANART

Art.532

STRUTTURA PIEGHEVOLE PER TAVOLI

Folding table support
Supports pour tables pliables
Faltbares Tischgestell

ART. 532

Struttura pieghevole per tavoli
Folding table support
Supports pour tables pliables
Faltbares Tischgestell

ALTEZZA - HEIGHT - HAUTÊR - HÖHE

Standard 70 cm.
Standard size 70 cm.
Standard taille 70 cm.
Standard Mass 70 cm.

FINITURE - FINISHES - EXECUTIONS - AUSFUEHAUNGEN

Verniciatura epossidica alluminio bucciato.
Epoxy painting orange peel aluminium.
Peinture Epoxide peau d'orange aluminium.
Epoxy Lackierung Orangenschalen aus Aluminium.

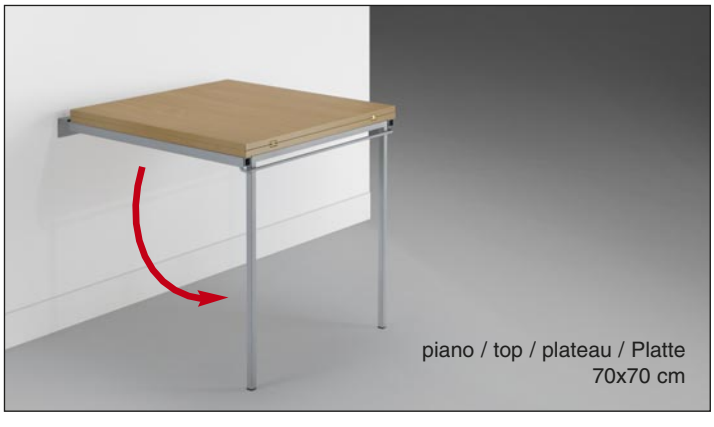

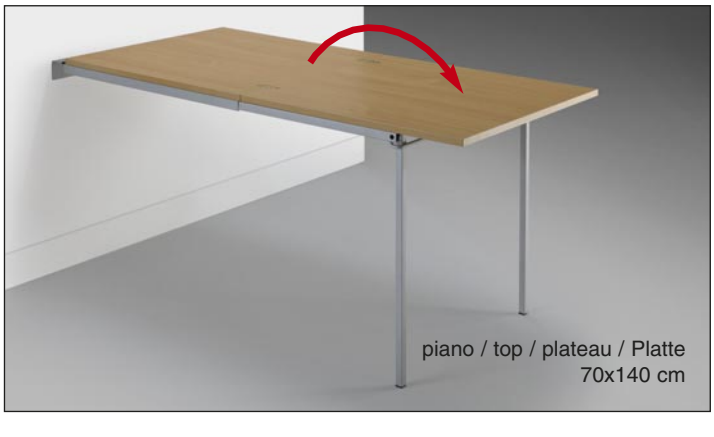

MANART srl - 23876 MONTICELLO - FRAZ. CORTENUOVA (LC) ITALY - Via T. Moneta, 17 - Tel. 039.920.35.55 - 039.920.26.44 - Fax 039.920.28.01
www.manart.it e-mail: manart@manart.it

ART. 920

GIUNZIONE PER TAVOLI.
Adatto a piani di ogni forma e facile da montare.
TABLE CONNECTOR ELEMENT.
Suitable for tops of any shape and easy to mount.
JONCTION POUR TABLES.
Adaptée aux plateaux de toute forme et facile à monter.
KOPPELUNG FÜR TISCHE.
Geeignet für Platten jeder Form und leicht zu montieren.

COLORI - COLOURS - COULEURS - FARBEN

nero - black - noir - Schwarz.

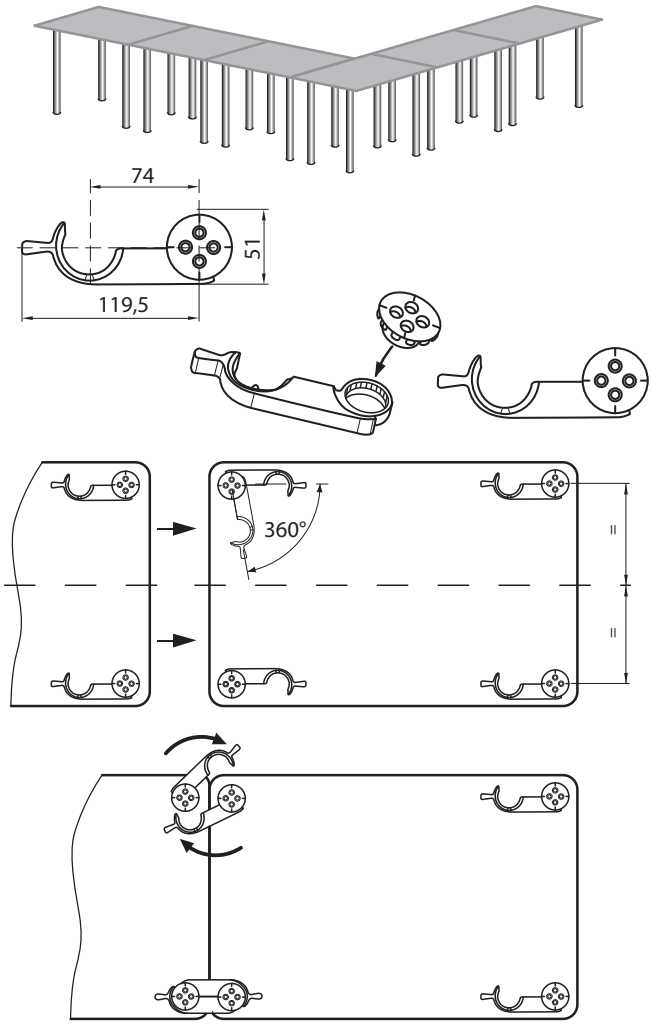

ART. 930

CANALINA PASSACAVI
CABLE MANAGEMENT SYSTEM
KABELFURÜHRUNG MÖGLICH
CANIVEAU PASSE-CÂBLES

COLORI - COLOURS - COULEURS - FARBEN

nero - alluminio. black - aluminium.
noir - aluminium. Schwarz - Aluminium.

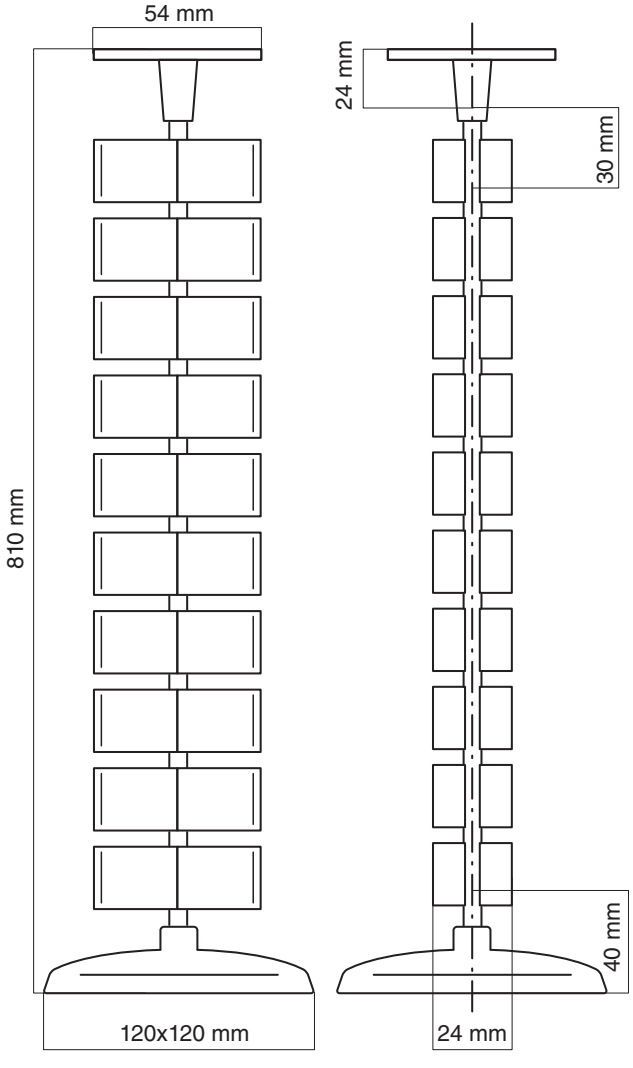

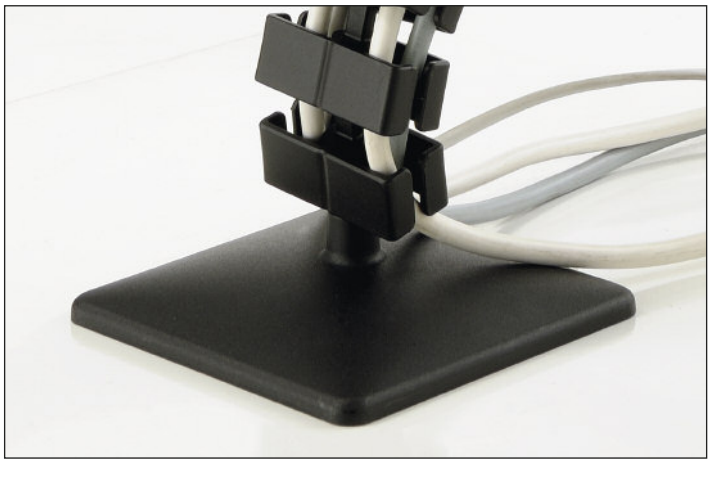

MANART srl - 23876 MONTICELLO - FRAZ. CORTENUOVA (LC) ITALY - Via T. Moneta, 17 - Tel. 039.920.35.55 - 039.920.26.44 - Fax 039.920.28.01
www.manart.it e-mail: manart@manart.it

ART. 931

CANALINA PASSACAVI
CABLE MANAGEMENT SYSTEM
KABELFURÜHRUNG MÖGLICH
CANIVEAU PASSE-CÂBLES

COLORI - COLOURS - COULEURS - FARBEN

nero - alluminio. black - aluminium.
noir - aluminium. Schwarz - Aluminium.

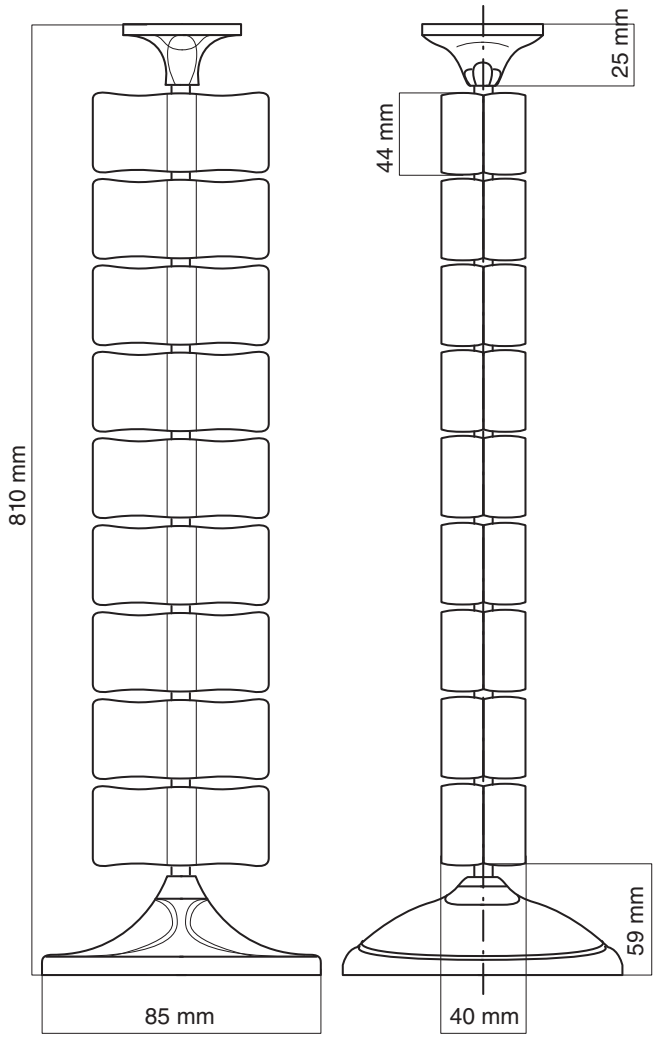

ART. 932

CANALINA PASSACAVI
CABLE MANAGEMENT SYSTEM
KABELFURÜHRUNG MÖGLICH
CANIVEAU PASSE-CÂBLES

COLORI - COLOURS - COULEURS - FARBEN

nero - alluminio. black - aluminium.
noir - aluminium. Schwarz - Aluminium.

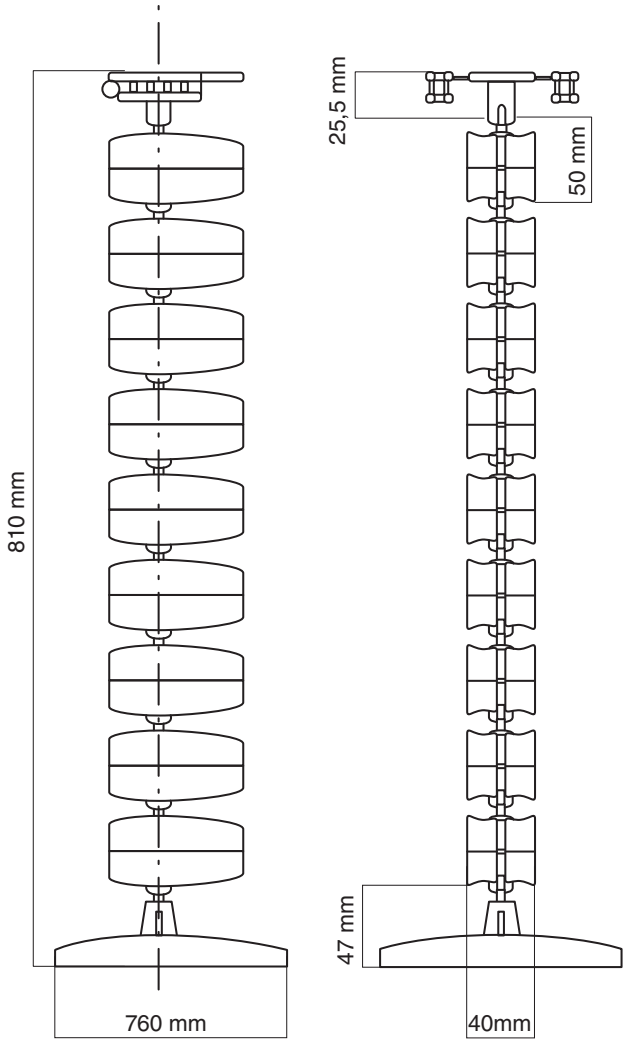

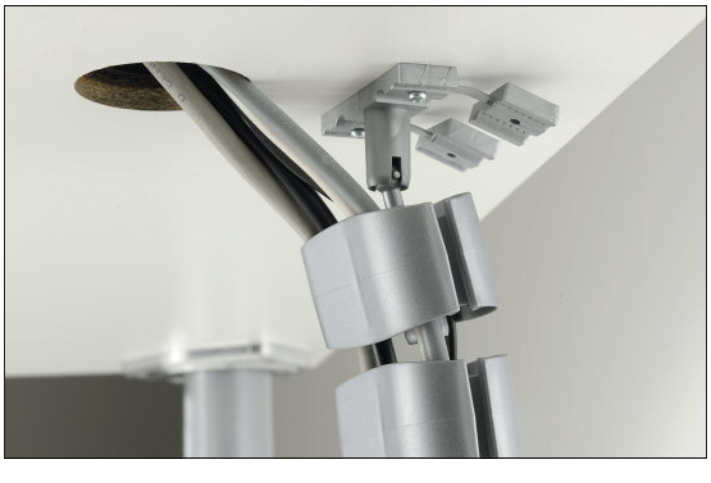

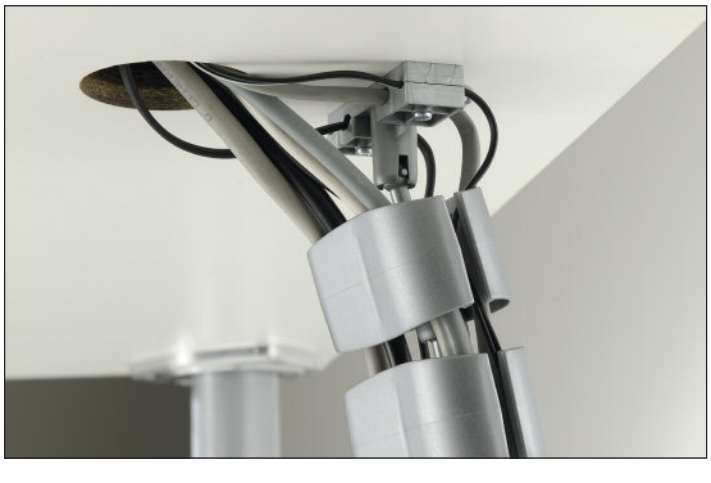

MANART srl - 23876 MONTICELLO - FRAZ. CORTENUOVA (LC) ITALY - Via T. Moneta, 17 - Tel. 039.920.35.55 - 039.920.26.44 - Fax 039.920.28.01
www.manart.it e-mail: manart@manart.it

MANART

ATTACCHI PER PANNELLI SCRIVANIA

Attachments for desk panels
Raccords pour voiles de bureau
Blendenschellen für Schreibtischblenden

900

901

902

903

904

Art. 900

Anello in ABS per gambe Ø 60 mm.
Ring in ABS for legs Ø 60 mm.
Anneau en ABS pour pieds Ø 60 mm.
Ring in ABS für Beine Ø 60 mm.

Art. 901

Gancio lungo in ABS, per pannelli interni alle gambe.
Long hook in ABS, for panels on the inside of the legs.
Crochet long en ABS, pour panneaux à l'intérieur des pieds.
Langer Haken in ABS für Paneele auf der Innenseite der Beine.

Art. 902

Gancio corto in ABS, per pannelli esterni alle gambe.
Short hook in ABS, for panels on the outside of the legs.
Crochet court en ABS, pour panneaux à l'extérieur des pieds.
Kurzer Haken in ABS für Paneele auf der Außenseite der Beine.

Art. 903

Passacavi in ABS, per foro Ø 60 mm.
Rallway in ABS, for hole Ø 60 mm.
Rainures pour câbles en ABS, pour trou Ø 60 mm.
Kabeldurchgang aus ABS für Bohrung Ø 60 mm.

Art. 904

Passacavi in ABS, per foro Ø 80 mm.
Rallway in ABS, for hole Ø 80 mm.
Rainures pour câbles en ABS, pour trou Ø 80 mm.
Kabeldurchgang aus ABS für Bohrung Ø 80 mm.

MANART

23876 MONTICELLO - Fraz. Cortenuova (LC) ITALY
Via T. Moneta, 17 - Tel. 039.920.35.55 - 039.920.26.44
Fax 039.920.28.01 - e-mail: manart@manart.it
www.manart.it

3 cestelli sottopensili supporti, ganci colonne componibili per cucina

MANART

Accessori per cucina Fittings for furniture
Accessoires pour meubles de cuisine

Art. M3124 325x180x180 h mm. Porta rotolo singolo.
Single roll-stand. / Porte-rouleau unique.

Art. M3120 450x180x270 h mm. Cestello grande.
Large rack. / Grand panier.

Art. M3121 310x85x330 h mm. Porta spezie.
Spices-stand. / Porte-épices.

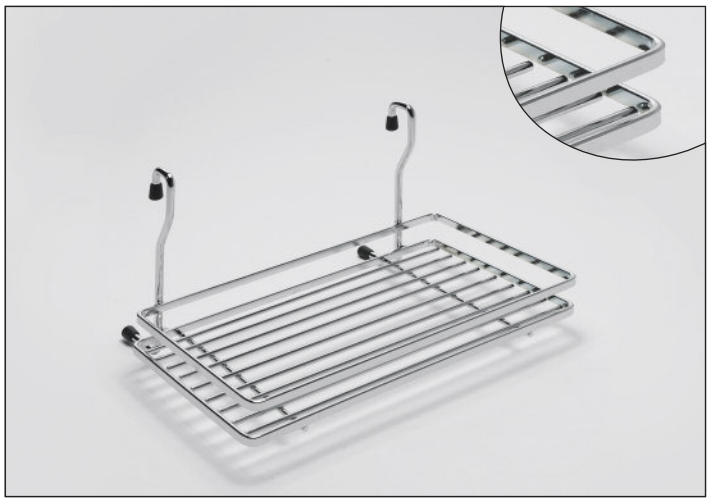

Art. M3122 260x190x150 h mm. Cestello piccolo.
Small rack. / Petit panier.

Art. M3125 325x170x355 h mm. Porta rotolo triplo.
Triple roll-stand. / Porte-rouleau triple.

MANART srl 23876 MONTICELLO - Fraz. Cortenuova (LC) ITALY - Via T. Moneta, 17
Tel. 039.920.35.55 - 039.920.26.44 - Fax 039.920.28.01 - e-mail: manart@manart.it - www.manart.it

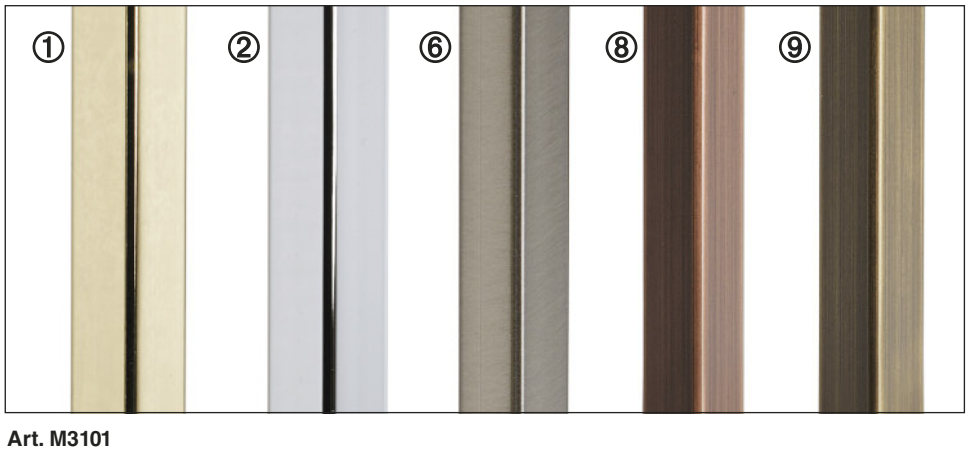

Finiture disponibili / Finishes / Executions:

① Ottonato
Brassed / Laitonne

② Cromato
Chromed / Chrome

⑥ Nickel satinato
Nickel satined / Nickel satiné

⑧ Ramato spazzolato
Brush copper / Cuivre brosse

⑨ Bronzo spazzolato
Brush bronze / Bronzé brosse

Art. M3101
Tubo / *Tube* / *Tube* 16x16x1,2 mm. Lunghezze standard: 60-90-100-120-150 cm.

Art. M3102
Gancio appenditutto per tubo da 16x16 mm.
Hook for everything suitable for tube 16x16 mm.
Crochet pour tout endiqué pour tube 16x16 mm.

Art. M3104
Copritesta terminale 16x16 mm.
Terminal cover cap 16x16 mm.
Couvre tête terminal 16x16 mm.

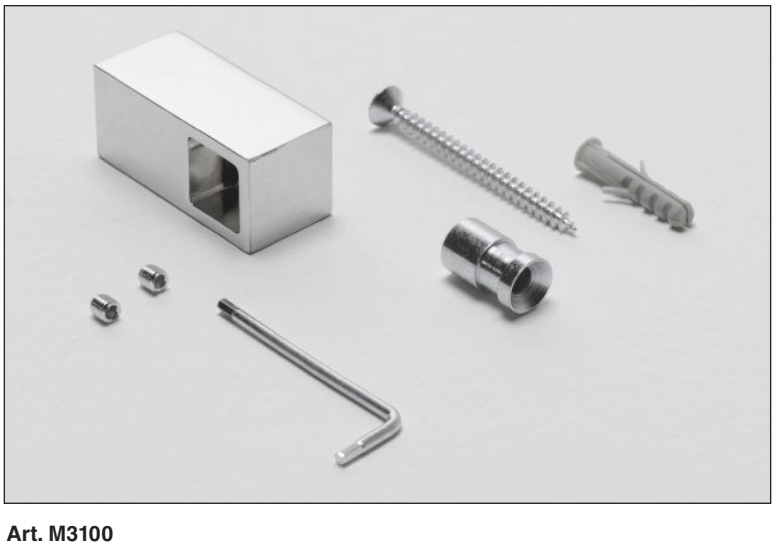

Art. M3100
Portatubo 16x16 mm con accessori. *Tube support fo 16x16 mm with fittings.*
Palier de tube pour 16x16 mm avec accessoires.

MANART srl - 23876 MONTICELLO - FRAZ. CORTENUOVA (LC) ITALY - Via T. Moneta, 17 - Tel. 039.920.35.55 - 039.920.26.44 - Fax 039.920.28.01
www.manart.it e-mail: manart@manart.it

MANART

Accessori per cucina Fittings for furniture
Küchenzubehör Accessoires pour meubles de cuisine

Art. M3005 Curva a 90°.
Curve 90°. / Courbe 90°.

Art. M3011
Gancio appenditutto in zama.
Zama hook for everything.
Crochet pour tout en zama.

Art. M3006 Curva a 135°.
Curve 135°. / Courbe 135°.

Art. M3002
Gancio appenditutto.
Hook for everything suitable for tube Ø 16 mm.
Crochet pour tout endiqué pour tube Ø 16 mm.

Art. M3014
Gancio appenditutto.
Hook for everything suitable for tube Ø 16 mm.
Crochet pour tout endiqué pour tube Ø 16 mm.

Art. M3003
Giunzione in nylon per tubo Ø 16x1,5 mm.
Particular made of nylon for tube Ø 16x1,5 mm.
Particular en nylon pour tube Ø 16x1,5 mm.

Art. M3012
Copritesta terminale con inserto in nylon.
Terminal cover cap with insert made of nylon.
Couvre tête terminal avec particular en nylon.

Art. M3007
Copritesta terminale in stile.
Terminal cover cap in old style.
Couvre tête terminal en vieux style.

Art. M3004
Copritesta terminale.
Terminal cover cap.
Couvre tête terminal.

50 mm

Art. M3000
Portatubo Ø 16 mm con accessori.
Tube support for Ø 16 mm with fittings.
Palier de tube pour Ø 16 mm avec accessoires.

45 mm

Art. M3013
Portatubo Ø 16 mm con accessori.
Tube support for Ø 16 mm with fittings.
Palier de tube pour Ø 16 mm avec accessoires.

Cestello grande. 450x180x270 h mm.
Large rack. / Grand panier.

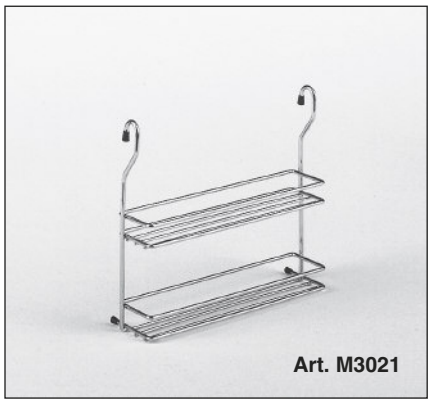

Porta spezie. 310x85x275 h mm.
Spices-stand. / Porte-épices.

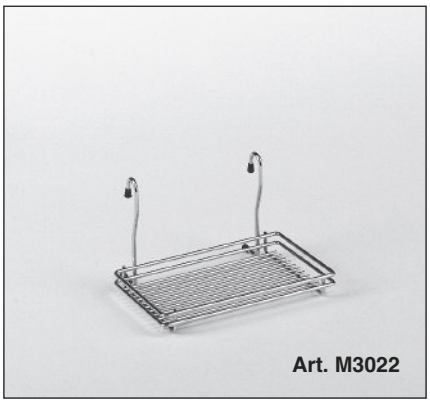

Cestello piccolo. 260x190x150 h mm.
Small rack. / Petit panier.

Cestello angolo dx-sx. 310x310x275 h mm.
Ringht-Left corner rack. /
Panier d'angle droit-gauche.

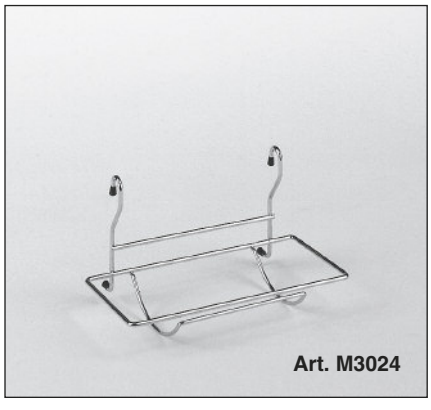

Porta rotolo singolo. 325x180x180 h mm.
Single roll-stand. / Porte-rouleau unique.

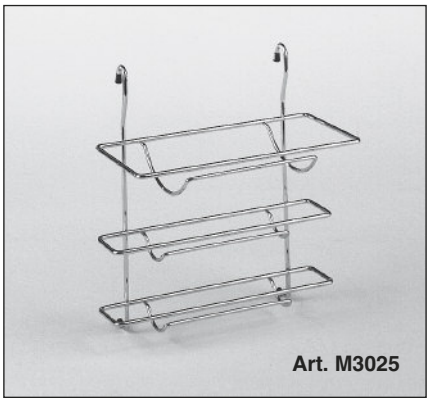

Porta rotolo triplo. 325x170x355 h mm.
Triple roll-stand. / Porte-rouleau triple.

Leggio pieghevole. 340x30x380 h mm.
Folding reading-stand. / Pupitre pliable.

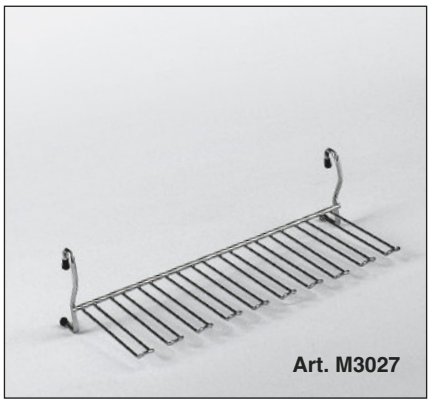

Porta bicchieri. 410x190x120 h mm.
Glass-rack. / Porte-verres.

Porta mattarello. 250x65x130 h mm.
Rolling-pin-stand. / Porte-matterello.

Porta bottiglie. 235x105x360 h mm.
Bottles rack. / Porte-bouteilles.

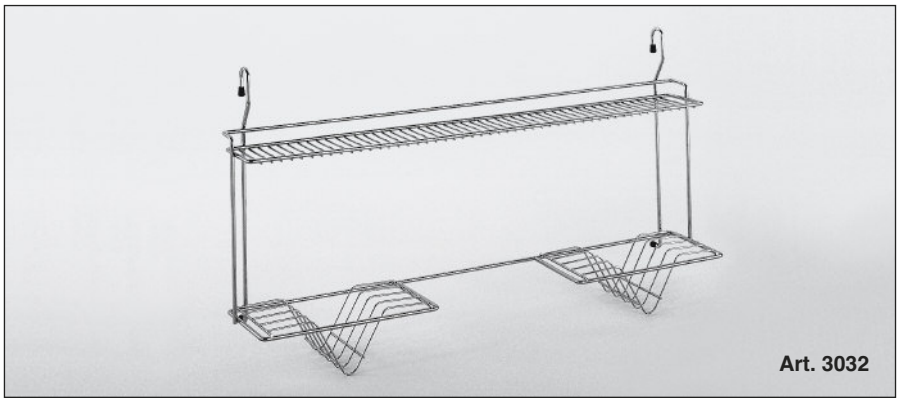

Scolapiatti. 750x160x400 h mm.
Plate rack. / Égouttoir à vaisselle.

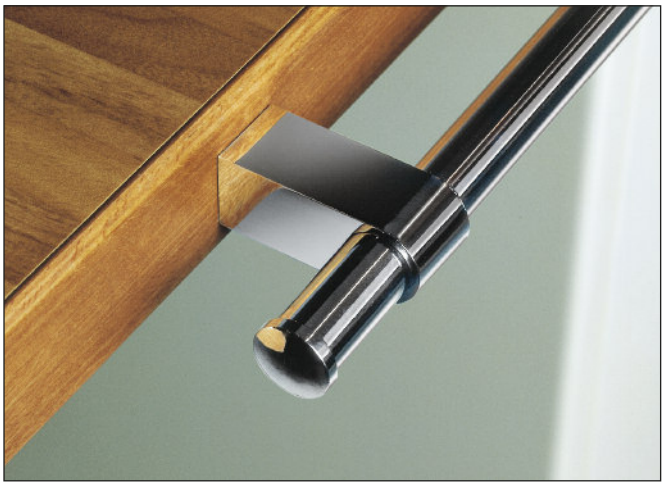

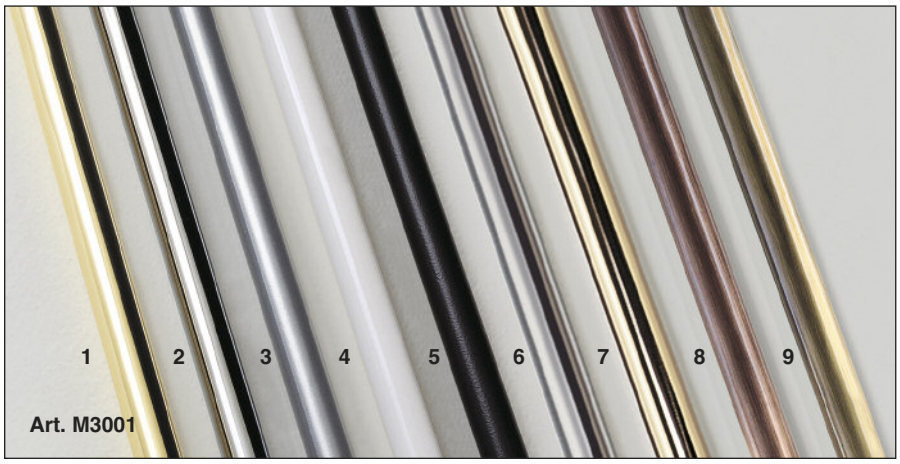

Tubo Ø 16 x sp. 1,5 mm.
Lunghezze standard: 60-90-100-120-150 cm.
Tube Ø 16x1,5 mm. / Tube Ø 16x1,5 mm.

Finiture disponibili / Finishes / Executions:

1 Ottonato */ Brassed / Laitonne*
2 Cromato */ Chromed / Chrome*
3 Verniciato alluminio */ Painting aluminium / Peinture aluminium*
4 Verniciato bianco */ Painting white / Peinture blanc*
5 Verniciato nero bucciato */ Painting orange peel black / Peinture noir texturé*
6 Nickel satinato */ Nickel satined / Nickel satiné*
7 Bagno oro */ Gold plated / Bain d'or*
8 Ramato spazzolato */ Brush copper / Cuivre brosse*
9 Bronzo spazzolato */ Brush bronze / Bronzé brosse*

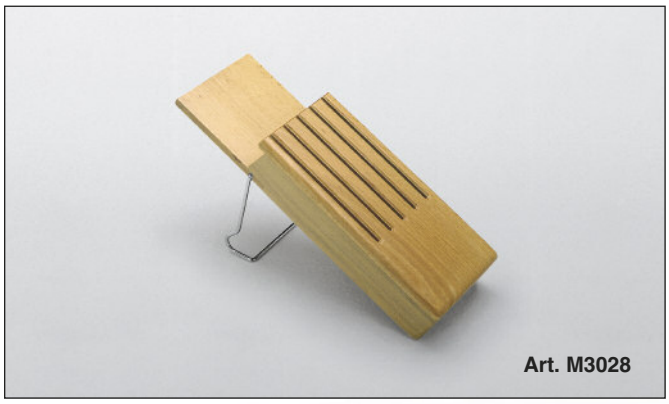

Porta coltelli in legno. 160x70x370 h mm.
Wooden knife-holder. / Porte-couteaux en bois.

Porta posate con contenitore in ABS. 115x160x315 h mm.
Utensile rack with ABS container.
Porte-couverts avec récipient en ABS

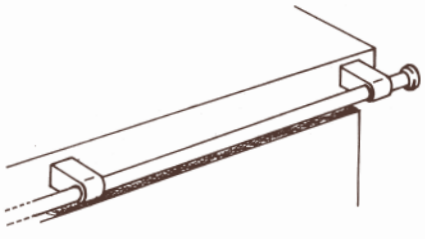

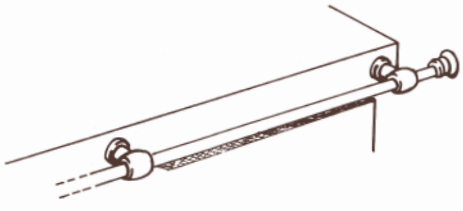

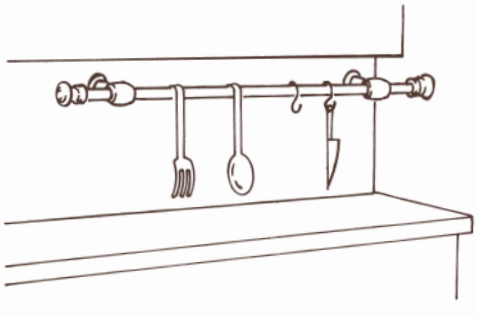

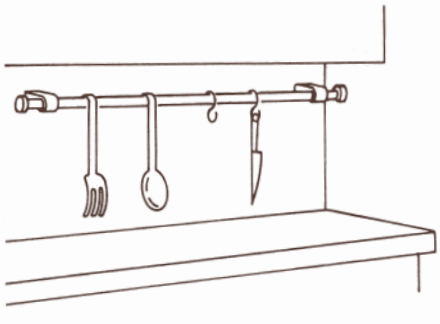

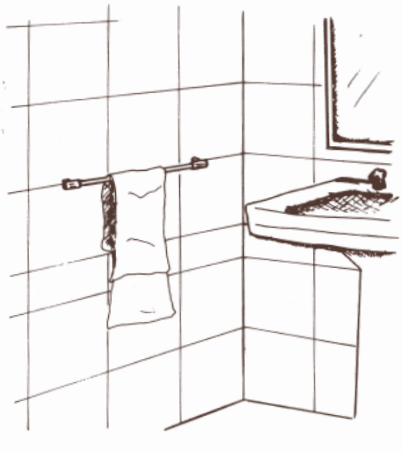

MANART s.r.l.
23876 MONTICELLO - FRAZ. CORTENUOVA (LC) ITALY
Via T. Moneta, 17 - Tel. 039.920.35.55 - 039.920.26.44
Fax 039.920.28.01 www.manart.it e-mail: manart@manart.it

Timbro del rivenditore - Dealer's stamp - Händlerstempel - Timbre du revendeur

MANART

Cestelli per cucina Baskets for kitchen
Körbe für die Küche Paniers pour meubles de cuisine

finitura GR

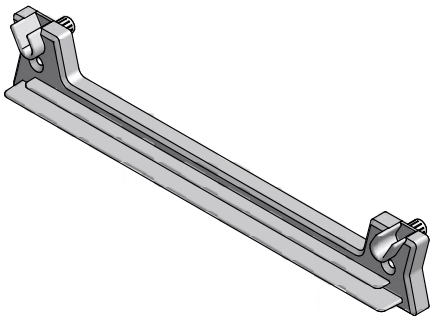

art.3197

Coppia staffe di fissaggio (per art. 3196).
Pair of fixing brackets (for art. 3196).

Befestigungselemente, Paar (für Art. 3196).
Paire de brides de fixation (pour art. 3196).

finitura GR

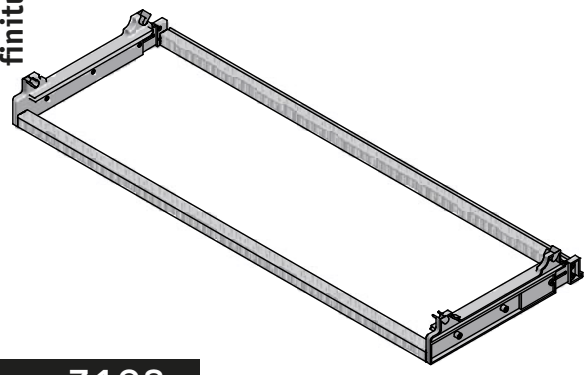

art.3198

cm. 45/60/80/90
Telaio in alluminio (per art. 3196).
Aluminium frame (for art. 3196).

Aluminiumrahmen (für Art. 3196).
Cadre en aluminium (pour art. 3196).

finitura GR finitura CR

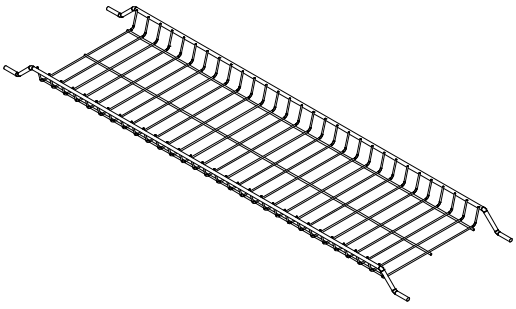

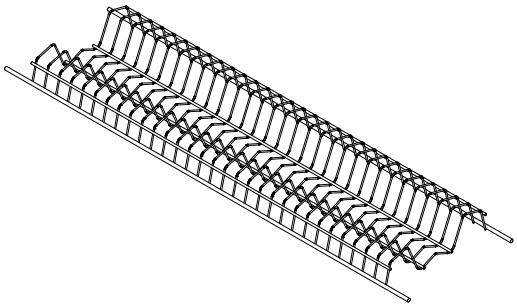

art.3196

cm. 45/60/80/90
Coppia griglie per scolapiatti.
Pair of racks for plate drainer.

Geschirrabtropfkorb, 2er-Set.
Paire de grilles pour égouttoir à vaisselle.

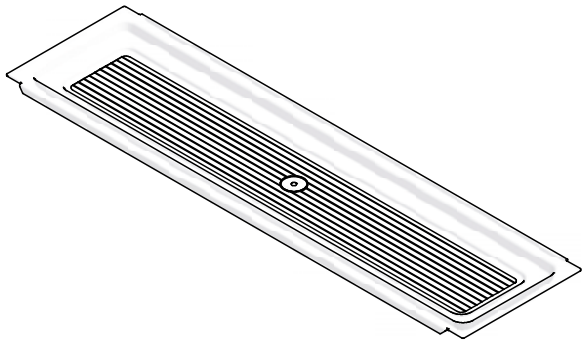

art.3199

cm. 45/60/80/90
Raccogligocce (per art. 3198).
Drip tray (for art. 3198).

Abtropftablett (für Art. 3198)
Plateau ramasse-gouttes (pour art. 3198)

finitura CR

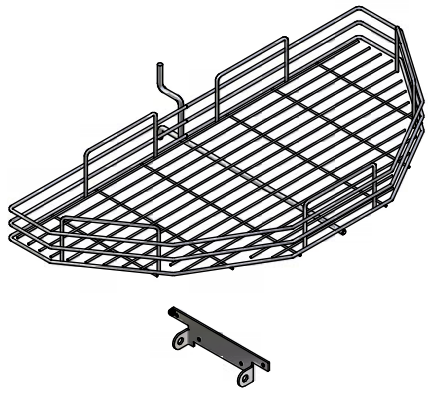

art.3200

Ø660mm.
Cestello girevole mezzaluna.
Swivel half-moon basket.

art.3201

Ø760mm.
Halbmondförmige drehbare Körbchen.
Panier pivotant demi-lune.

finitura CR

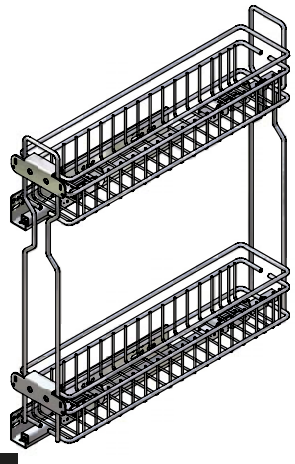

art.3203

L.200 x P.500mm.
Cestello portabottiglie con guide laterali.
Bottle basket with side guides.

Flaschenkörbchen mit seitlichen Führungen.
Panier porte-bouteilles avec glissières latérales.

finitura CR

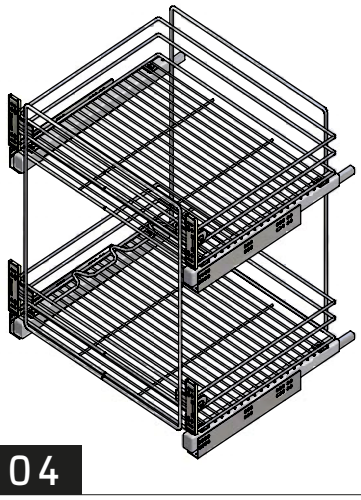

art.3204

L.300 x P.500mm.
Cestello portabottiglie con guide laterali.
Bottle basket with side guides.

Flaschenkörbchen mit seitlichen Führungen.
Panier porte-bouteilles avec glissières latérales.

finitura CR

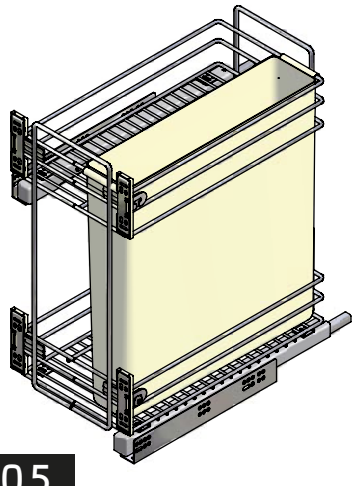

art.3205

L.230 x P.450mm.
Cestello portabottiglie e portapane con guide laterali.
Bottle and bread basket with side guides.

Flaschenkörbchen und Brotkasten mit seitlichen Führungen.
Panier porte-bouteilles et porte-pain avec glissières latérales.

finitura CR

art.3206

L.400 x P.500mm.
Cestello portabottiglie con guide laterali.
Bottle basket with side guides.

Flaschenkörbchen mit seitlichen Führungen.
Panier porte-bouteilles avec glissières latérales.

finitura CR

art.3207

L.450 x P.500mm.
Cestello portabottiglie con guide laterali.
Bottle basket with side guides.

Flaschenkörbchen mit seitlichen Führungen.
Panier porte-bouteilles avec glissières latérales.

finitura CR

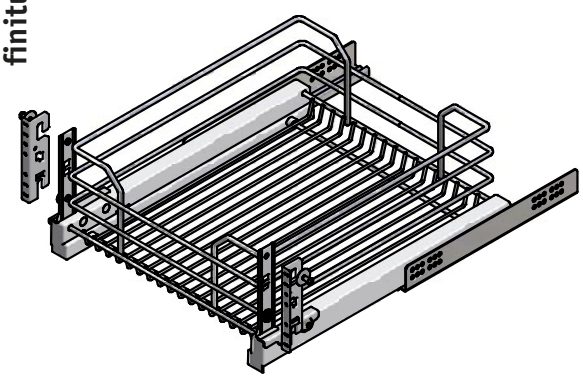

art.3208

L.600 x P.450mm.

Cestello cassetto con guide laterali con attacco all'anta.
Drawer basket with side guides with wing connection.

Schubladenkorb mit seitlichen Führungen mit Flügelanschluss.
Panier à tiroir avec guides latéraux avec raccordement à l'aile.

finitura CR

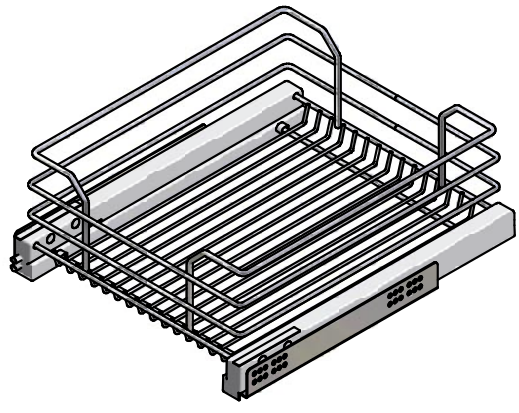

art.3209

L.600 x P.450mm.

Cestello cassetto con guide laterali senza attacco all'anta.
Drawer basket with side guides without door connection.

Schubladenkorb mit Seitenführungen ohne Türanschluss.
Panier à tiroir avec guides latéraux sans raccordement de porte.

finitura CR

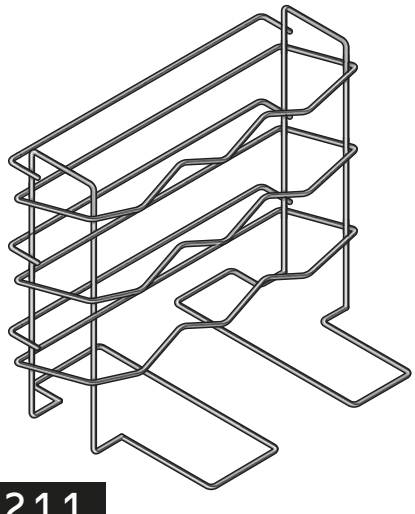

art.3211

L.350 x P.250 x h.340mm.

Portabottiglie 9 posti.
Bottle basket 9 pcs.
Flaschenkorb 9 Stück.
Porte-bouteilles 9 pièces.

finitura CR

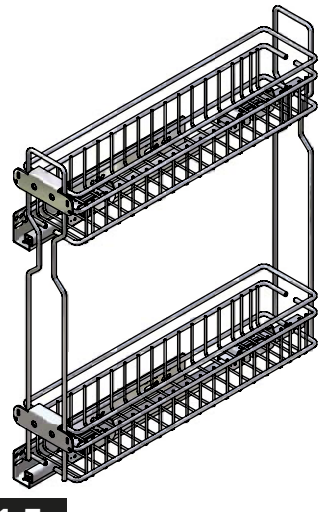

art.3215

L.150 x P.450mm.

Cestello jolly estraibile con guide laterali sinistre.
Extractable Jolly basket with guide mounted on left side.

Ausziehbares Körbchen Jolly mit seitlichen Führungen links.
Panier jolly coulissant avec glissières latérales gauches.

finitura - **finish - execution - Ausführung**	
CR cromato - chrome-plated - verchromt - chromé	GR grigio - grey - grau - gris

MONTICELLO

MANART s.r.l.

23876 MONTICELLO - FRAZ. CORTENUOVA (LC) ITALY
Via T. Moneta, 17 - Tel. 039.920.35.55 - 039.920.26.44
Fax 039.920.28.01 www.manart.it e-mail: manart@manart.it

Timbro del rivenditore - Dealer's stamp - Händlerstempel - Timbre du revendeur

MANART

COLONNE COMPONIBILI PER CUCINA

Fitted column
Küchensäule
Colonne èquièe

Colonne componibili per cucina

art.3500

finitura CR

Tubo cromato Ø 50 mm., spessore 1,5 mm. x 3 mt.
Altri spessori disponibili su richiesta.
Chrome plated tube Ø 50 mm., 1.5 mm. thickness x 3 mt. Other thicknesses available upon request.

Verchromt Rohr Ø 50 mm., Materialstärke 1,5 mm. x 3 mt. Auf Anfrage sind weitere Stärken lieferbar.
Tube chromé Ø 50 mm., épaisseur 1,5 mm. x 3 mt. Autres épaisseurs disponibles sur demande.

art.3501

finitura CR

Gruppo di fissaggio superiore regolabile con copertura per tubo Ø 50 mm.
Adjustable upper fixing element with cover for tube Ø 50 mm.

Oberer Befestigungssatz, mit der Rohrabdeckung Ø 50 mm. einstellbar.
Groupe de fixation supérieur réglable avec cache pour tube Ø 50 mm.

art.3502

finitura CR

Anello di fissaggio per tubo Ø 50 mm.
Fixing ring for tube Ø 50 mm.

Befestigungsring für Rohr Ø 50 mm.
Bague de fixation pour tube Ø 50 mm.

art.3503

finitura CR

Terminale di fissaggio a pavimento per tubo Ø 50 mm.
Floor mount fixing terminal unit for tube Ø 50 mm.

Endstück zur Bodenbefestigung für Rohr Ø 50 mm.
Embout terminal de fixation au sol pour tube Ø 50 mm.

art.3504

finitura CR

Ghiera di fissaggio per mensole o piani in legno per tubo Ø 50 mm.
Shelves or wooden tops fixing ring nut for tube Ø 50 mm.

Befestigungsnutmutter für Abstellflächen oder Platten aus Holz für Rohr Ø 50 mm.
Frette de fixation pour étagères ou plateaux en bois pour tube Ø 50 mm.

art.3505

finitura CR

Copritesta terminale per tubo Ø 50 mm.
Final tube head cover for tube Ø 50 mm.

Verschlußstöpsel für Rohr Ø 50 mm.
Embout terminal supérieur pour tube Ø 50 mm.

art.3506

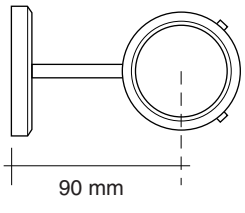

finitura CR

Distanziatore per fissaggio a parete per tubo Ø 50 mm.
Wall mount fixing spacer for tube Ø 50 mm.

Distanzstück zur Wandbefestigung für Rohr Ø 50 mm.
Ecarteur pour fixation au mur pour tube Ø 50 mm.

art.3507

finitura CR

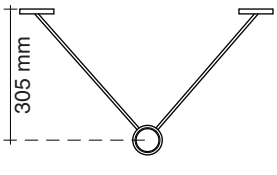

Distanziatore doppio per fissaggio a parete per tubo Ø 50 mm.
Wall mount fixing double spacer for tube Ø 50 mm.

Doppeltes Distanzstück zur Wandbefestigung für Rohr Ø 50 mm.
Ecarteur double pour fixation au mur pour tube Ø 50 mm.

art.3508

finitura CR

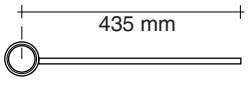

Supporto con asta singola appendi tutto per tubo Ø 50 mm.
Single all-purpose hanger staff support for tube Ø 50 mm.

Ringhalter mit einzelner Mehrzweckstange für Rohr Ø 50 mm.
Barre de support simple avec anneau pour tube Ø 50 mm.

art.3509

finitura CR

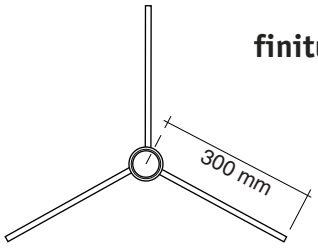

Supporto con tre aste appendi tutto per tubo Ø 50 mm.
Triple all-purpose hanger staff support for tube Ø 50 mm.

Ringhalter mit drei Mehrzweckstangen für Rohr Ø 50 mm.
Support 3 barres avec anneau pour tube Ø 50 mm.

art.3002

finitura CR

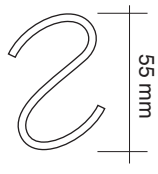

Gancio appendi tutto semplice.
Simple all-purpose hook.

Einfacher Mehrzweckhaken.
Crochet simple.

art.3014

finitura CR

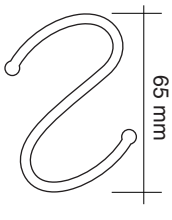

Gancio appendi tutto grosso con estremità arrotondate.
Large all-purpose hook with rounded tops.

Großer Mehrzweckhaken mit abgerundeten Enden.
Gros crochet avec extrémités arrondies.

art.3510

finitura CR

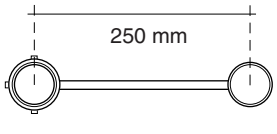

Supporto con asta distanziatrice per mensole esterne in vetro Ø 300 mm. per tubo Ø 50 mm.
Spacing staff support for external glass shelves Ø 300 mm. for tube Ø 50 mm.

Ringhalter mit Distanzstange für äußere Abstellflächen aus Glas Ø 300 mm. für Rohr Ø 50 mm.
Support avec barre d'écartement pour étagères extérieures en verre Ø 300 mm. pour tube Ø 50 mm.

art.3511

finitura CR

Mensola in vetro Ø 300 mm. per tubo Ø 50 mm.
Glass shelf Ø 300 mm. for tube Ø 50 mm.

Abstellfläche aus Glas Ø 300 mm., für Rohr Ø 50 mm.
Etagère en verre Ø 300 mm. pour tube Ø 50 mm.

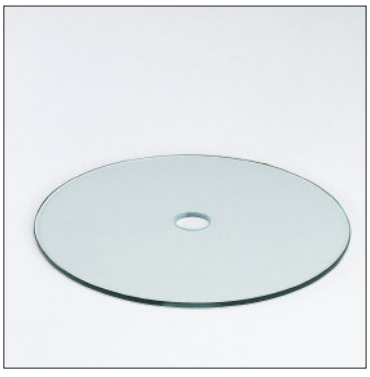

art.3512

finitura CR

Mensola in vetro Ø 450 mm. per tubo Ø 50 mm.
Glass shelf Ø 450 mm. for tube Ø 50 mm.

Abstellfläche aus Glas Ø 450 mm., für Rohr Ø 50 mm.
Etagère en verre Ø 450 mm. pour tube Ø 50 mm.

art.3513

finitura CR

Mensola in vetro Ø 300 mm. con ringhiera per tubo Ø 50 mm.
Glass shelf Ø 300 mm. with retainer for tube Ø 50 mm.

Abstellfläche aus Glas Ø 300 mm. mit Einfassung für Rohr Ø 50 mm.
Etagère en verre Ø 300 mm. avec rambarde pour tube Ø 50 mm.

art.3514

finitura CR

Mensola in vetro Ø 450 mm. con ringhiera per tubo Ø 50 mm.
Glass shelf Ø 450 mm. with retainer for tube Ø 50 mm.

Abstellfläche aus Glas Ø 450 mm. mit Einfassung für Rohr Ø 50 mm.
Etagère en verre Ø 450 mm. avec rambarde pour tube Ø 50 mm.

art.3515

finitura CR

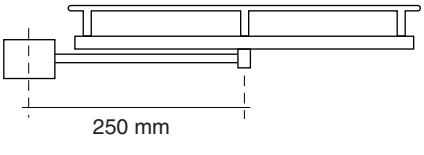

Mensola esterna in legno Ø 300 mm. con ringhiera, supporto e asta distanziatrice per tubo Ø 50 mm.
External wooden shelf Ø 300 mm. with retainer, support and spacing staff for tube Ø 50 mm.

Äußere Abstellfläche aus Holz Ø 300 mm. mit Einfassung, Ringhalter und Distanzstange für Rohr Ø 50 mm.
Etagère extérieure en bois Ø 300 mm. avec rambarde, barre d'écartement et anneau pour tube Ø 50 mm.

art.3516

finitura CR

Mensola centrale in legno Ø 300 mm. con ringhiera per tubo Ø 50 mm.
Central wooden shelf Ø 300 mm. with retainer for tube Ø 50 mm.

Zentrale Abstellfläche aus Holz Ø 300 mm. mit Einfassung für Rohr Ø 50 mm.
Etagère centrale Ø 300 mm. avec rambarde pour tube Ø 50 mm.

art.3517

finitura CR

Mensola centrale in legno Ø 450 mm. con ringhiera per tubo Ø 50 mm.
Central wooden shelf Ø 450 mm. with retainer for tube Ø 50 mm.

Zentrale Abstellfläche aus Holz Ø 450 mm. mit Einfassung für Rohr Ø 50 mm.
Etagère centrale Ø 450 mm. avec rambarde pour tube Ø 50 mm.

art.3518

finitura CR

Mensola centrale in acciaio Ø 300 mm. per tubo Ø 50 mm.
Central steel shelf Ø 300 mm. for tube Ø 50 mm.

Zentrale Abstellfläche aus Stahl Ø 300 mm. für Rohr Ø 50 mm.
Etagère centrale acier Ø 300 mm. pour tube Ø 50 mm.

art.3519

finitura CR

Cesto porta bicchieri Ø 400 mm. per tubo Ø 50 mm.
Glass holder basket Ø 400 mm. for tube Ø 50 mm.

Gläserkorb Ø 400 mm. für Rohr Ø 50 mm.
Panier porte verre Ø 400 mm. pour tube Ø 50 mm.

art.3520

finitura CR

Cesto piccolo centrale Ø 300 mm. per tubo Ø 50 mm.
Small central basket Ø 300 mm. for tube Ø 50 mm.

Kleiner zentraler Netzkorb Ø 300 mm. für Rohr Ø 50 mm.
Petit panier central Ø 300 mm. pour tube Ø 50 mm.

art.3521

finitura CR

Cesto grande centrale Ø 450 mm. per tubo Ø 50 mm.
Large central basket Ø 450 mm. for tube Ø 50 mm.

Großer zentraler Netzkorb Ø 450 mm. für Rohr Ø 50 mm.
Grand panier central Ø 450 mm. pour tube Ø 50 mm.

art.3522

finitura CR

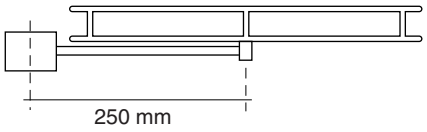

Cesto piccolo esterno Ø 300 mm. con supporto e asta distanziatrice per tubo Ø 50 mm.
Small external basket Ø 300 mm. with support and spacing staff for tube Ø 50 mm.

Kleiner äußerer Netzkorb Ø 300 mm. mit Ringhalter und Distanzstange für Rohr Ø 50 mm.
Petit panier extérieur Ø 300 mm. avec barre d'écartement et anneau pour tube Ø 50 mm.

art.3523

finitura CR

Supporto per fissaggio piani in legno per tubo Ø 50 mm.
Wooden tops fixing support for tube Ø 50 mm.

Ringhalter zur Befestigung der Holzplatten für Rohr Ø 50 mm.
Support pour fixation de plateaux en bois pour tube Ø 50 mm.

art.3524

finitura CR

Piano in legno per tavolo sagomato con foro per tubo Ø 50 mm.
Shaped top for table with hole for tube Ø 50 mm.

Tischplatte aus Holz geformt, mit Bohrung für Rohr Ø 50 mm.
Plateau de table profilé en bois avec trou pour tube Ø 50 mm.

art.25 roller

Ø 60 mm - H 71 cm

finitura CR

Gamba con ruota piroettante, per piani tavolo girevoli, dotata di freno di bloccaggio simultaneo sulla ruota e sull'asse piroettante.
Leg with pivoting wheel for revolving table tops complete with simultaneous locking brake on the wheel and on the pivoting axis.

Fußbein mit Umlaufrad für drehbare Tischplatten mit Simultanblockierung des Rads und der Drehachse.
Pied avec roue pivotante, pour plateaux de table pivotants, doté d'un frein de blocage simultané sur la roue et sur l'axe pivotant

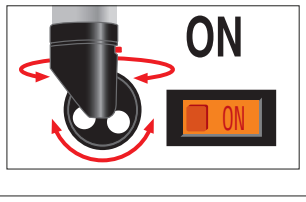

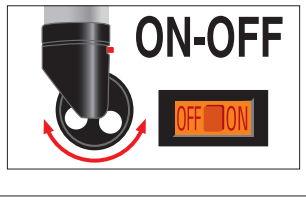

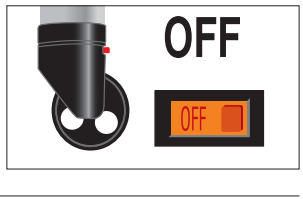

finitura
CR cromato - chrome-plated - verchromt - chromé

MANART s.r.l.
23876 MONTICELLO - FRAZ. CORTENUOVA (LC) ITALY
Via T. Moneta, 17 - Tel. 039.920.35.55 - 039.920.26.44
Fax 039.920.28.01 www.manart.it e-mail: manart@manart.it

Timbro del rivenditore - Dealer's stamp - Händlerstempel - Timbre du revendeur

MANART

23876 MONTICELLO - Fraz. Cortenuova (LC) ITALY
Via T. Moneta, 17 - Tel. 039.920.35.55 - 039.920.26.44
Fax 039.920.28.01 - e-mail: manart@manart.it
www.manart.it

4

reggipensili
tubi e reggitubi
reggimensole
minuteria varia
viteria
giunzioni e chiusure

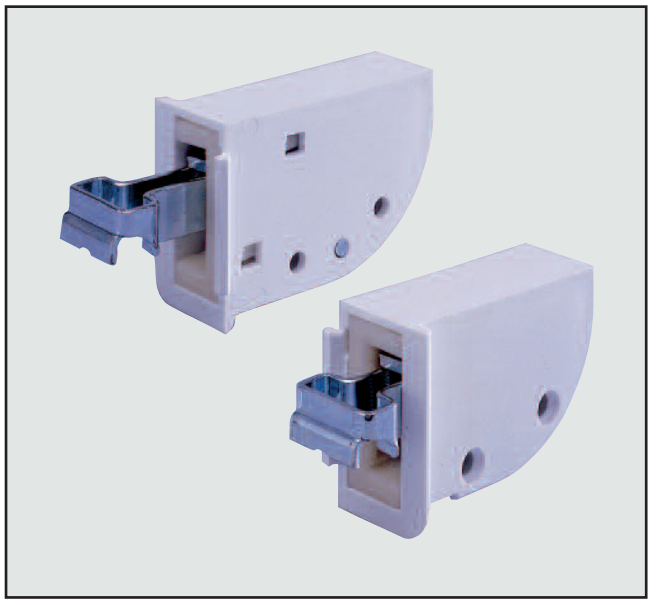

ART. 600

Reggipensile da inserire nel pensile e fissaggio con due viti autofilettanti.
Cabinet hanging bracket to be mounted on cabinet with 2, self tapping screws.
Supports pour armoires suspendus à monter sul l'armoire pour fixation par deux vis autotaraudeuses.
Schrankaufhaenger zum Anschrauben an den Haengeschrank durch zwei selbsteinschneidene Schrauben

MATERIALE - MATERIAL - MATIÈRE - MATERIAL

Nylon - Nylon - Nylon - Nylon

FINITURE - FINISHES - EXÉCUTIONS - AUSFUEHRUNGEN

Bianco - Nero - Marrone
White - Black - Brown
Blanc - Noir - Marron
Weiss - Schwarz - Braun

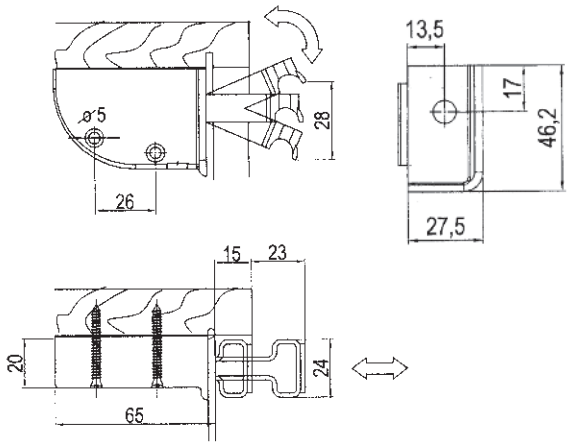

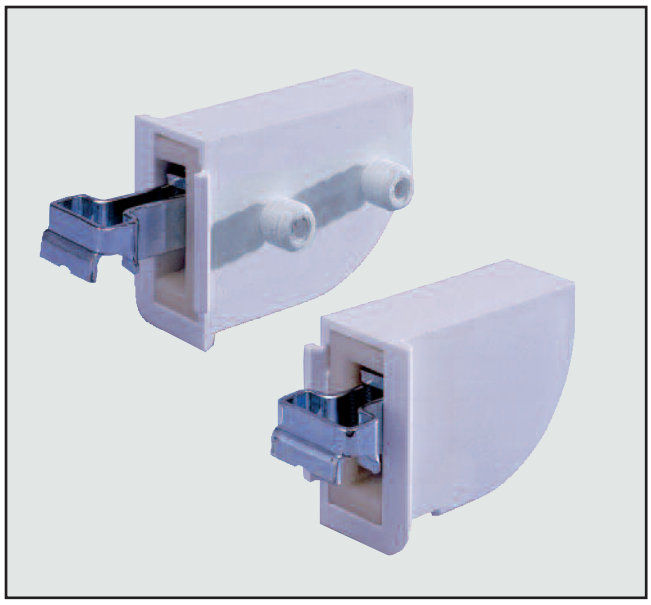

ART. 601

Reggipensile da inserire nel pensile preforato
Cabinet handing bracket
Supports pour armoires suspendus à sul l'armoire pré-bercé
Schrankaufhaenger zum Einsetzen in vorgelochten Haengeschrank

MATERIALE - MATERIAL - MATIÈRE - MATERIAL

Nylon - Nylon - Nylon - Nylon

FINITURE - FINISHES - EXÉCUTIONS - AUSFUEHRUNGEN

Bianco - Nero - Marrone
White - Black - Brown
Blanc - Noir - Marron
Weiss - Schwarz - Braun

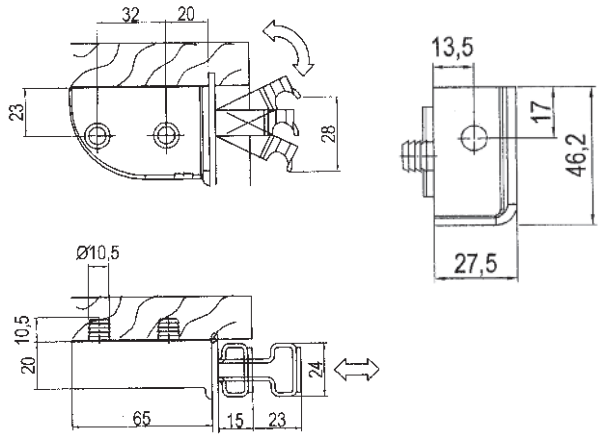

ART. 603

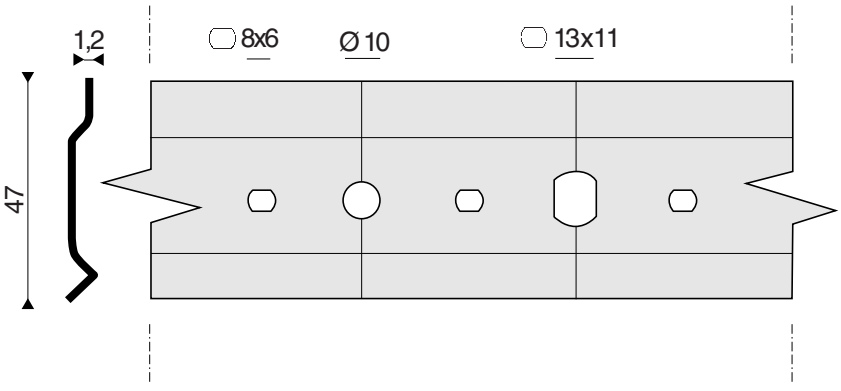

Barra portapensili
Cabinet hanging strip
Rail porte armoires suspendus
Aufhaengeleiste fuer Haengeschraenke verzinkt

ALTEZZA - HEIGHT - HAUTER - HÖHE

47 mm.

FISSAGGIO - FIXING - FIXAGE - FIXIERUNG

Ø 10 mm. - ▭ 13 x 11 mm. - ▭ 8 x 6 mm.

MATERIALE - MATERIAL - MATIÈRE - MATERIAL

Ferro zincato
Zinc plated steel
Fer Zingué
Verzinkt Eisen

Lunghezza standard 2 mt. con pretaglio ogni 5 cm.
Stock length 2 mt. - 50 mm. cut out
Longueur standard 2 mt. avec fentes précoupées à 5 cm.
Standarlaenge 2 Meter mit Einschnitten alle 5 cm.

ART. 610

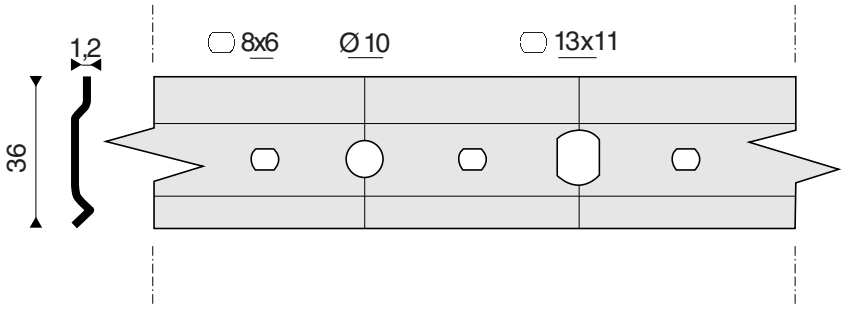

Barra portapensili
Cabinet hanging strip
Rail porte armoires suspendus
Aufhaengeleiste fuer Haengeschraenke verzinkt

ALTEZZA - HEIGHT - HAUTER - HÖHE

36 mm.

FISSAGGIO - FIXING - FIXAGE - FIXIERUNG

Ø 10 mm. - ▭ 13 x 11 mm. - ▭ 8 x 6 mm.

MATERIALE - MATERIAL - MATIÈRE - MATERIAL

Ferro zincato
Zinc plated steel
Fer Zingué
Verzinkt Eisen

Lunghezza standard 2 mt. con pretaglio ogni 5 cm.
Stock length 2 mt. - 50 mm. cut out
Longueur standard 2 mt. avec fentes précoupées à 5 cm.
Standarlaenge 2 Meter mit Einschnitten alle 5 cm.

Sistema di montaggio reggipensili art. 600 / 601 / 604 / 605 / 606 sul muro
Cabinet hanging system art. 600 / 601 / 604 / 605 / 606 to the wall
Systeme de suspension pour armoires suspendus art. 600 / 601 / 604 / 605 / 606 au parois
Die Schrankaufhaengesysteme art. 600 / 601 / 604 / 605 / 606 an der Wand befestigt

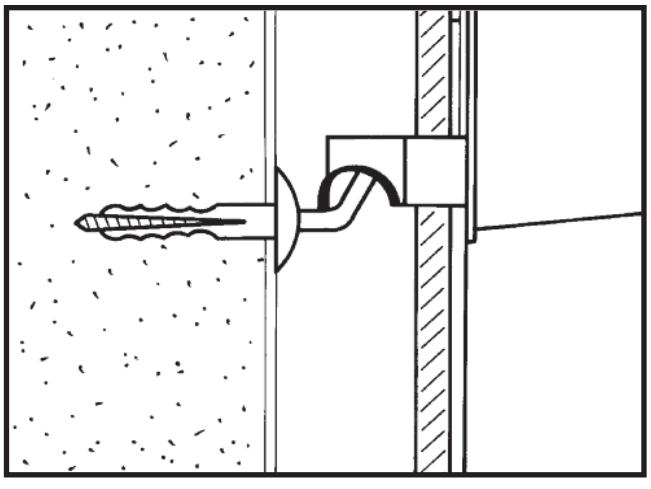

- Fissaggio con tasselli ad espansione.
- Fixation au mur par chevilles à expansion.
- Wall fixing on expanding bolts.
- Befestigung am Wand mit Expansionduebel.

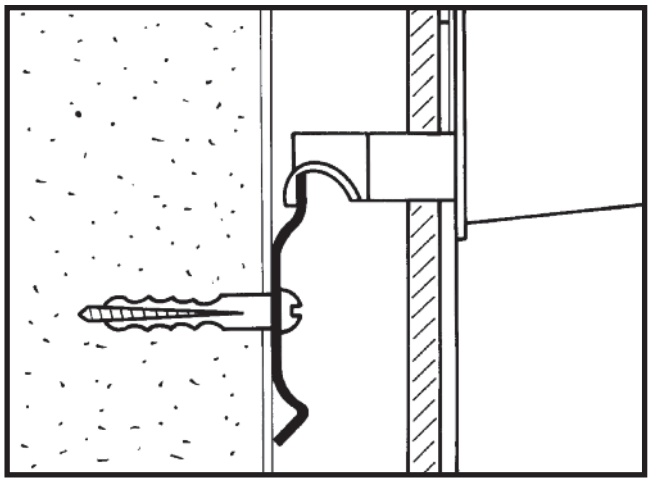

- Fissaggio con barra Manart art. 603.
- Fixation au mur par barres Manart art. 603.
- Wall fixing with Manart steel bar art. 603.
- Befestigung mit Manart Aufhaengeliste Art. 603.

MANART srl - 23876 MONTICELLO (LC) - Via T. Moneta, 17 - Fraz. Cortenuova - Tel. 039.9203555 - 039.9202644 - Fax 039.9202801
e-mail: manart@manart.it - www.manart.it

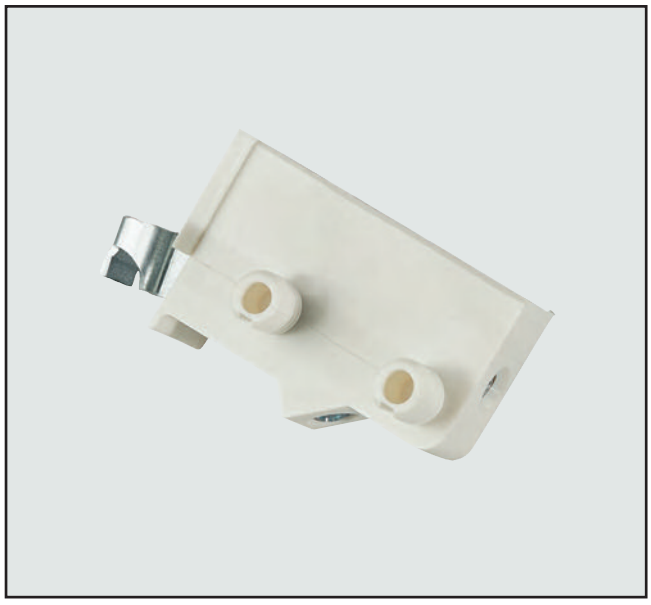

ART. 604

Reggipensile da inserire nel pensile preforato
Cabinet handing bracket
Supports pour armoires suspendus à sul l'armoire pré-bercé
Schrankaufhaenger zum Einsetzen in vorgelochten Haengeschrank

REGOLAZIONE - ADJUSTMENT - REGLACE - REGULIERUNG

Orizzontale 22 mm. Verticale da 17 a 30 mm. in funzione
della regolazione orizzontale
Side 22 mm. Vertical from 17 to 30 mm. According to side adjustment
Horizontal 22 mm. Vertical de 17 à 30 mm. d'apres réglage horizontal
Seitenverstellung 22 mm. Hoehenverstellung von 17 bis 30 mm. je nach
Seitenverstellung

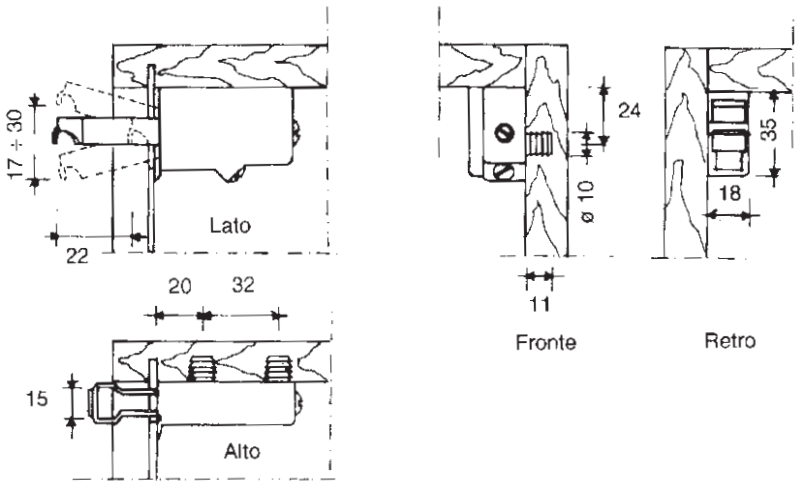

ART. 605

Reggipensile da inserire nel pensile e fissaggio con due viti Ø 4 autofilettanti.
Cabinet hanging bracket to be mounted on cabinet with 2 - 4 mm. dia, self tapping screws.
Supports pour armoires suspendus à monter sul l'armoire pour fixation par deux vis autotaraudeuses diam. 4 mm.
Schrankaufhaenger zum Anschrauben an den Haengeschrank durch zwei selbsteinschneidene Schrauben

REGOLAZIONE - ADJUSTMENT - REGLACE - REGULIERUNG

Orizzontale 22 mm. Verticale da 17 a 30 mm. in funzione
della regolazione orizzontale
Side 22 mm. Vertical from 17 to 30 mm. According to side adjustment
Horizontal 22 mm. Vertical de 17 à 30 mm. d'apres réglage horizontal
Seitenverstellung 22 mm. Hoehenverstellung von 17 bis 30 mm. je nach
Seitenverstellung

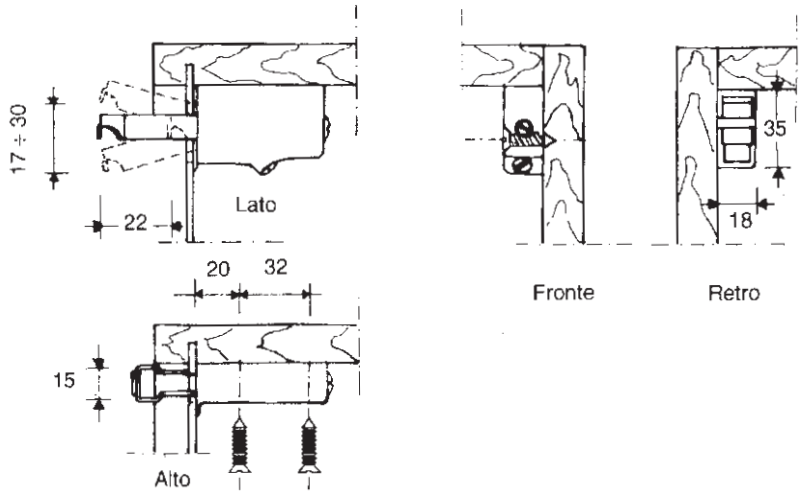

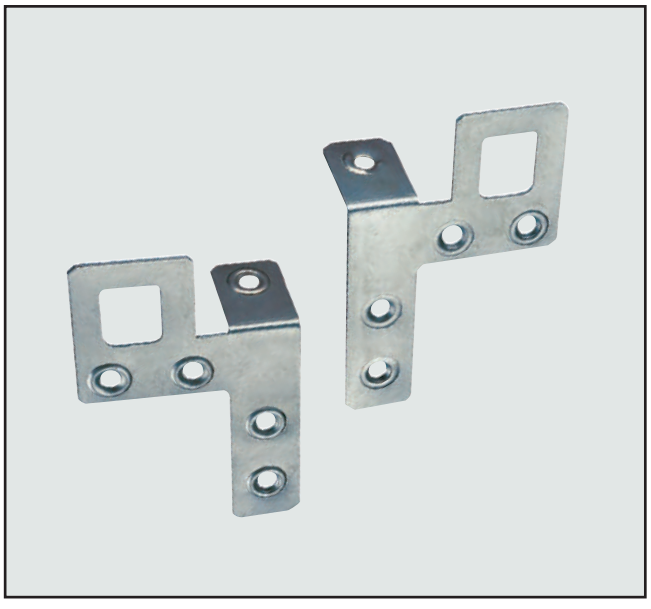

ART. 198

FISSAGGIO - FIXING - FIXAGE - FIXIERUNG

Reggipensili fissi per mobili destro e sinistro
Right and left fixed cabinet shelves supports
Supports droit en gauche fixed pour meubles
Befestigtes Moebelauflager rechts und links

MATERIALE - MATERIAL - MATIÈRE - MATERIAL

Acciaio zincato - zinc coated steel - acier zingué - Verzinktstahl

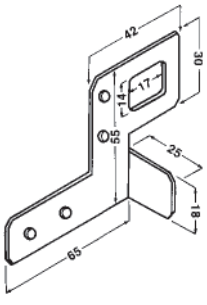

ART. 606

Reggipensile regolabile adatto per barra portapensili art. 603
Regulable cabinet hanging bracket suitable for cabinet hanging strip art. 603
Supports pour amoires sospendus réglable indiqué pour rail porte armoires suspendus art. 603
Befestigtes Moebelauflager rechts und links
Regelbare Schrankaufhaenger geeignet fuer Aufhaengeleiste fuer Haengeschraenke verzinkt art. 603

MATERIALE - MATERIAL - MATIÈRE - MATERIAL

Acciaio zincato - zinc coated steel - acier zingué - Verzinktstahl

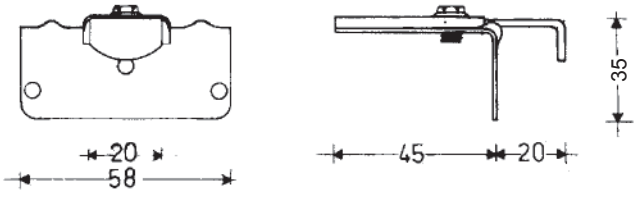

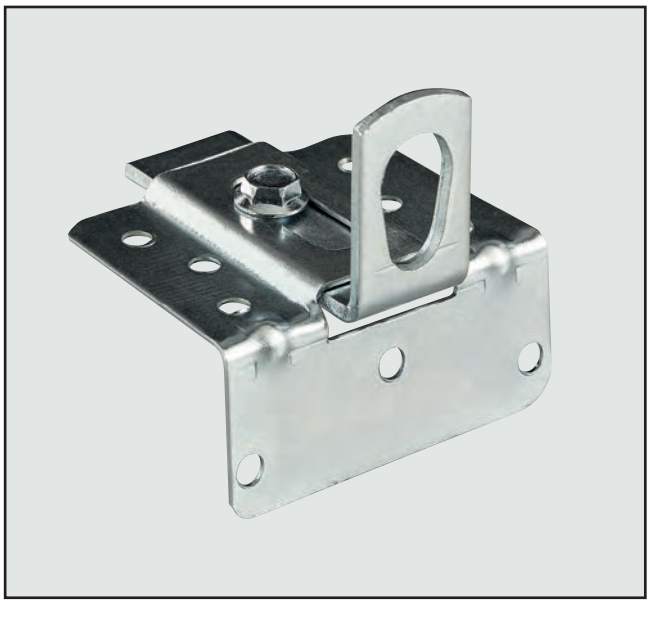

ART. 607

Reggipensile regolabile
Regulable cabinet hanging bracket
Supports pour amoires sospendus réglable
Regelbare Schrankaufhaenger

MATERIALE - MATERIAL - MATIÈRE - MATERIAL

Acciaio zincato - zinc coated steel - acier zingué - Verzinktstahl

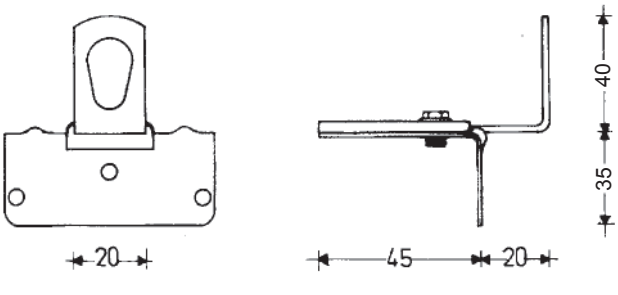

MANART srl - 23876 MONTICELLO (LC) - Via T. Moneta, 17 - Fraz. Cortenuova - Tel. 039.9203555 - 039.9202644 - Fax 039.9202801
e-mail: manart@manart.it - www.manart.it

ART. 608

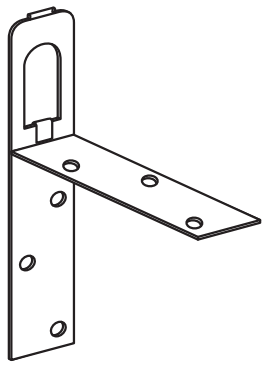

Mensola a squadretta saldata per pensili.
Shelf with welded brackets for hanging units.
Étagère à support soudé pour meubles muraux
Geschweißter Winkel für Hängeschränke.

FISSAGGIO - FIXING - FIXAGE - FIXIERUNG

Fori Ø 4 mm.
Screwholes Ø 4 mm.
Trous Ø 4 mm.
Loecher Ø 4 mm.

MATERIALE - MATERIAL - MATIÉRE - MATERIAL

Acciaio - steel - acier - Stahl.

FINITURE - FINISHES - EXECUTIONS - AUSFUEHAUNGEN

Zincato. Galvanized.
Zingué. Verzinkt.

ART. 611

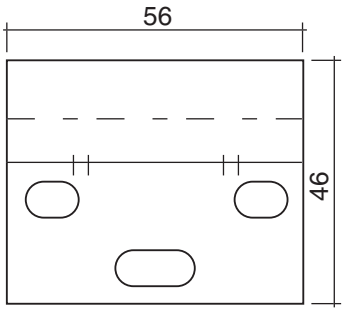

Piastrina reggipensile.
Hanging bracket plate.
Plaque de support pour meubles muraux
Stützplättchen Hängeschrank.

FISSAGGIO - FIXING - FIXAGE - FIXIERUNG

Fori ovali 10x6,8 mm. e 15x6,8 mm.
Oval screwholes 10x6,8 mm and 15x6,8 mm.
Trous ovales 10x6,8 mm et 15x6,8 mm.
Ovale Löcher 10x6,8 mm und 15x6,8 mm.

MATERIALE - MATERIAL - MATIÉRE - MATERIAL

Acciaio - steel - acier - Stahl.

FINITURE - FINISHES - EXECUTIONS - AUSFUEHAUNGEN

Zincato. Galvanized.
Zingué. Verzinkt.

ART. M 708 / 709 / 710 / 711

Tubo per appendiabiti o arredamento
Closet tube
Tubes de Garde-Robes ou decoration
Schrankrohre

LUNGHEZZA - LENGHT - LONGUEUR - LAENGE*

3 mt. max. per finiture cromato - verniciato - ottonato
3 mt. max in steel chrome plated - epoxy coated - steel brass plated
3 mt. max. pour exécution fer chromé - verni - laitonné
3 Meter max. in verchromter - lackierter Ausfuehrung - vermessingter Ausfuehrung

FINITURE - FINISHES - EXÉCUTIONS - AUSFUEHRUNGEN**

Cromato/Ottonato - Verniciato epossidico Bianco / Nero / Marrone / Alluminio
Stell chrome plated / Brass plated White / Black / Brown epoxy coated / Aluminium
Fer chrome / Laitonné - Verni epoxy coul Blanc / Noir / Marron / Aluminium
Verchromt / Vermessingt - Weiss / Schwarz / Braun epoxydlackiert / Aluminium

SPESSORE - THICKNESS - EPAISSEUR - STANDARDROHROICKE

0,7 mm (possibili altri spessori su richiesta specifica) - 1 mm. per art. M 708
0,7 mm (other thickness possible on request) - 1 mm. for art. M 708
0,7 mm (d'autres épaisseurs sur demande) - 1 mm. pour art. M 708
0,7 mm (weitere Ronrdicken auf besondere Anfrage erhaeltlich) - 1 mm. für art. M 708

M 708

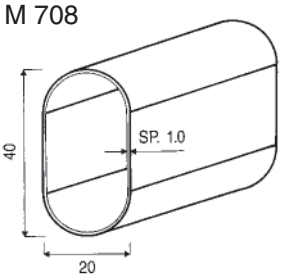

M 709

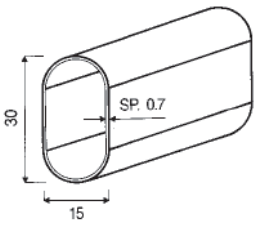

M 710

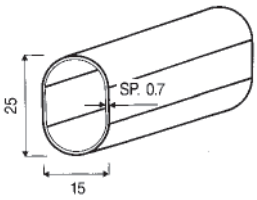

M 711

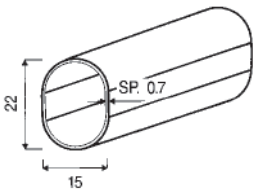

* Disponibili a richiesta tagliati su misura - Also available cut to lenght on request - D'autres longueurs livrables sur demande - Weitere Farben auf besondere Aufrage er haeltlich
** Altri colori a richiesta - Other colors also available on request - D'autres couleurs sur demande - Weitere Rohrdicken auf besondre Anfrage erhaeltlich

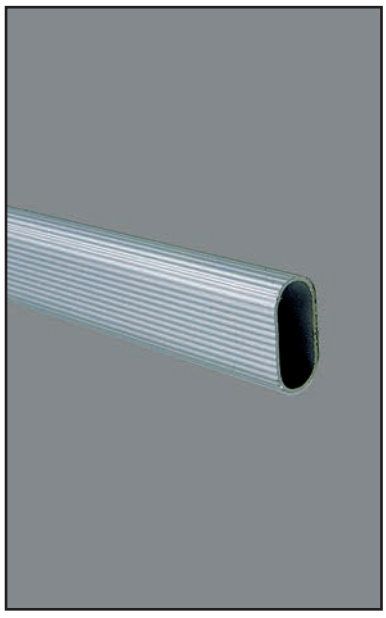

ART. M 709

Tubo per appendiabiti o arredamento in alluminio
Closet tube aluminium
Tubes de Garde-Robes ou decoration aluminium
Schrankrohre Aluminium

LUNGHEZZA - LENGHT - LONGUEUR - LAENGE*

3 mt. max.
3 mt. max
3 mt. max.
3 Meter max.

FINITURE - FINISHES - EXÉCUTIONS - AUSFUEHRUNGEN**

Alluminio anodizzato
Aluminium anodized
Aluminium éloxage
Eloxalaluminium

SPESSORE - THICKNESS - EPAISSEUR - STANDARDROHROICKE

1,3 mm
1,3 mm
1,3 mm
1,3 mm

M 709

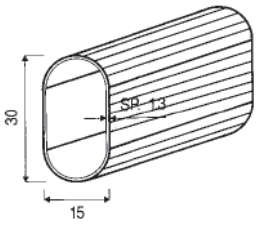

ART. M 712 / 713

Tubo per appendiabiti o arredamento
Closet tube
Tubes de Garde-Robes ou decoration
Schrankrohre

LUNGHEZZA - LENGHT - LONGUEUR - LAENGE*

3 mt. max. per finiture cromato - verniciato - ottonato
3 mt. max in steel chrome plated - epoxy coated - steel brass plated
3 mt. max. pour exécution fer chromé - verni - laitonné
3 Meter max. in verchromter - lackierter Ausfuehrung - vermessingter Ausfuehrung

FINITURE - FINISHES - EXÉCUTIONS - AUSFUEHRUNGEN**

Cromato/Ottonato - Verniciato epossidico
Stell chrome plated / Brass plated epoxy coated
Fer chrome / Laitonné - Verni epoxy
Verchromt / Vermessingt - epoxydlackiert

SPESSORE - THICKNESS - EPAISSEUR - STANDARDROHROICKE

1,2 mm (possibili altri spessori su richiesta specifica)
1,2 mm (other thickness possible on request)
1,2 mm (d'autres épaisseurs sur demande)
1,2 mm (weitere Ronrdicken auf besondere Anfrage erhaeltlich)

M 712

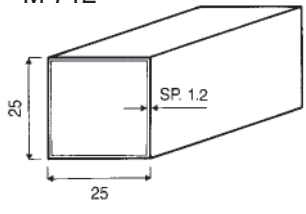

M 713

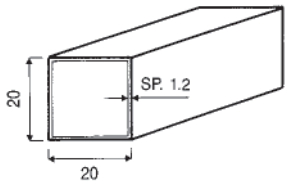

* Disponibili a richiesta tagliati su misura - Also available cut to lenght on request - D'autres longueurs livrables sur demande - Weitere Farben auf besondere Aufrage er haeltlich
** Altri colori a richiesta - Other colors also available on request - D'autres couleurs sur demande - Weitere Rohrdicken auf besondre Anfrage erhaeltlich

ART. M 714 / 715 / 706 / 707 / 705 / 746

Tubo per appendiabiti o arredamento
Closet tube
Tubes de Garde-Robes ou decoration
Schrankrohre

LUNGHEZZA - LENGHT - LONGUEUR - LAENGE*

3 mt. max. per finiture cromato - verniciato - ottonato
3 mt. max in steel chrome plated - epoxy coated - steel brass plated
3 mt. max. pour exécution fer chromé - verni - fer laitonné
3 Meter max. in verchromter - lackierter Ausfuehrung - vermessingter Ausfuehrung

FINITURE - FINISHES - EXÉCUTIONS - AUSFUEHRUNGEN**

Cromato/Ottonato - Verniciato epossidico Bianco / Nero / Marrone
Stell chrome plated / Brass plated White / Black / Brown epoxy coated
Fer chrome / Laitonné - Verni epoxy coul Blanc / Noir / Marron
Verchromt / Vermessingt - Weiss / Schwarz / Braun epoxydlackiert

SPESSORE - THICKNESS - EPAISSEUR - STANDARDROHROICKE

0,7 mm (possibili altri spessori su richiesta specifica) - 0,8 mm. per art. M 707
0,7 mm (other thickness possible on request) - 0,8 mm. for art. M 707
0,7 mm (d'autres épaisseurs sur demande) - 0,8 mm. pour art. M 707
0,7 mm (weitere Ronrdicken auf besondere Anfrage erhaeltlich) - 0,8 mm. für art. M 707

M 707

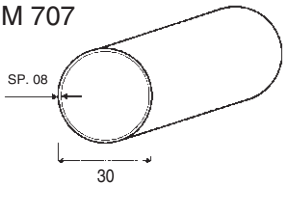

M 714

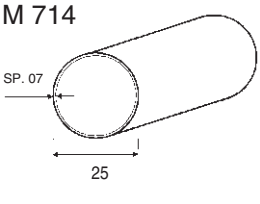

M 706

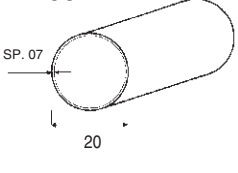

M 715

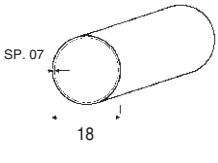

M 705

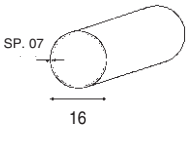

M 746

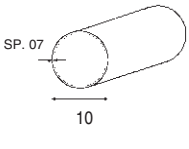

* Disponibili a richiesta tagliati su misura - Also available cut to lenght on request - D'autres longueurs livrables sur demande - Weitere Farben auf besondere Aufrage er haeltlich
** Altri colori a richiesta - Other colors also available on request - D'autres couleurs sur demande - Weitere Rohrdicken auf besondre Anfrage erhaeltlich

MANART srl - 23876 MONTICELLO (LC) - Via T. Moneta, 17 - Fraz. Cortenuova - Tel. 039.9203555 - 039.9202644 - Fax 039.9202801
e-mail: manart@manart.it - www.manart.it

ART. M796

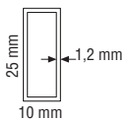

Tubo rettangolare per appendiabiti o arredamento
Rectangular closet tube rod
Tube rectangulaire pour penderies ou décoratif
Rechteckiges Rohr für Kleiderstangen oder Einrichtung

LUNGHEZZA - LENGHT - LONGUEUR - LAENGE

3 mt. max.

FINITURE - FINISHES - EXÉCUTIONS - AUSFUEHRUNGEN

Cromato/Ottonato
Verniciato epossidico Bianco / Nero / Marrone / Alluminio
Stell chrome plated
Brass plated White / Black / Brown epoxy coated / Aluminium
Fer chrome / Laitonné
Verni epoxy coul Blanc / Noir / Marron / Aluminium
Verchromt / Vermessingt
Weiss / Schwarz / Braun epoxydlackiert / Aluminium

SPESSORE - THICKNESS - EPAISSEUR - STANDARDROHROICKE

1,2 mm.

ART. M704

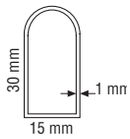

Tubo semiovale per appendiabiti o arredamento
Semioval closet tube rod
Tube semi-ovale pour penderies ou décoratif
Halbovales Rohr für Kleiderstangen oder Einrichtung

LUNGHEZZA - LENGHT - LONGUEUR - LAENGE

3 mt. max.

FINITURE - FINISHES - EXÉCUTIONS - AUSFUEHRUNGEN

Cromato/Ottonato
Verniciato epossidico Bianco / Nero / Marrone / Alluminio
Stell chrome plated
Brass plated White / Black / Brown epoxy coated / Aluminium
Fer chrome / Laitonné
Verni epoxy coul Blanc / Noir / Marron / Aluminium
Verchromt / Vermessingt
Weiss / Schwarz / Braun epoxydlackiert / Aluminium

SPESSORE - THICKNESS - EPAISSEUR - STANDARDROHROICKE

1 mm.

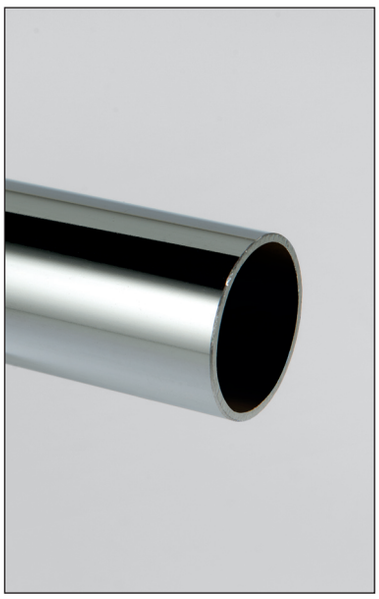

ART. M703

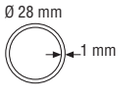

Tubo per appendiabiti o arredamento
Closet tube rod
Tube pour penderies ou décoratif
Rohr für Kleiderstangen oder Einrichtung

LUNGHEZZA - LENGHT - LONGUEUR - LAENGE

3 mt. max.

FINITURE - FINISHES - EXÉCUTIONS - AUSFUEHRUNGEN

Cromato/Ottonato
Verniciato epossidico Bianco / Nero / Marrone / Alluminio
Stell chrome plated
Brass plated White / Black / Brown epoxy coated / Aluminium
Fer chrome / Laitonné
Verni epoxy coul Blanc / Noir / Marron / Aluminium
Verchromt / Vermessingt
Weiss / Schwarz / Braun epoxydlackiert / Aluminium

SPESSORE - THICKNESS - EPAISSEUR - STANDARDROHROICKE

1 mm.

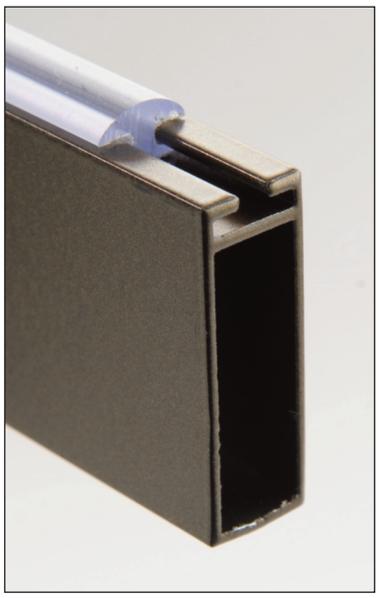

ART. M747

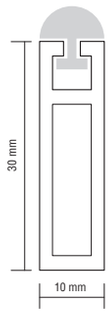

Tubo rettangolare in alluminio 30x10 mm con profilo in PVC
Rettangular aluminium tube 30x10 mm with PVC
Tube rectangulaire en aluminium 30x10 mm avec profile en PVC
Rechtackiges Aluminiumrrahr 30x10 mm mit PVC profil

LUNGHEZZA - LENGHT - LONGUEUR - LAENGE

3 Mt. max.
3 Mt. max.
3 Mt. max.
3 Mt. max.

FINITURE - FINISHES - EXECUTIONS - AUSFUEHAUNGEN

Verniciatura epossidica Bianco, Nero, Marrone, Alluminio, Mokka.
Epoxy painting White, Black, Brown, Aluminium, Mokka.
Peinture Epoxide Blanc, Noir, Marron, Aluminium, Mokka.
Epoxy Lackierung Weiss, Schwarz, Braun, Aluminium, Mokka.

MANART srl - 23876 MONTICELLO - FRAZ. CORTENUOVA (LC) ITALY - Via T. Moneta, 17 - Tel. 039.920.35.55 - 039.920.26.44 - Fax 039.920.28.01
www.manart.it e-mail: manart@manart.it

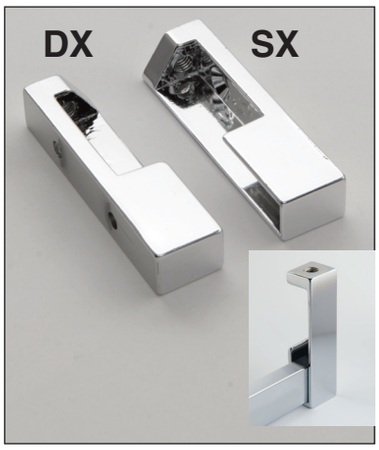

ART. M797/F

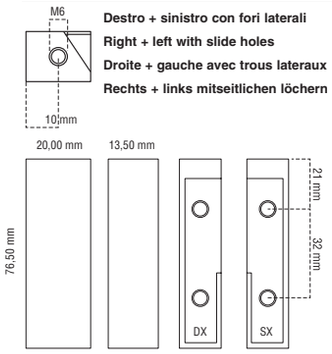

Destro + sinistro con fori laterali
Right + left with slide holes
Droite + gauche avec trous lateraux
Rechts + links mitseitlichen löchern

Reggitubo per tubo rettangolare 25 x 10 mm o 30 x 10 mm
Closet tube support holder for rectangular tube 25 x 10 mm or 30 x 10 mm
Support pour tube rectangulaire 25 x 10 mm ou 30 x 10 mm
Halterung für rechteckiges Rohr 25 x 10 mm - 30 x 10 mm

FISSAGGIO - FIXING - FIXAGE - FIXIERUNG

2 fori Ø 4 mm. e vite 6MA
2 Screwholes Ø 4 mm. and 6MA screw
2 Trous Ø 4 mm. et vis 6MA
2 Loseherm zu je Ø 4 mm. Gewindebohrung 6MA

MATERIALE - MATERIAL - MATIÉRE - MATERIAL

Zama - Zamak - Zamac - Zamak.

FINITURE - FINISHES - EXECUTIONS - AUSFUEHAUNGEN

Cromato - ottonato. Verniciatura epossidica tutti i colori.
Chromed - brass plated. Epoxy painting every colour.
Chromé - laitonné. Peinture Epoxide chaque couleur.
Verchromt - vermessingt. Epoxy Lackierung jeder Farbe.

ART. M797

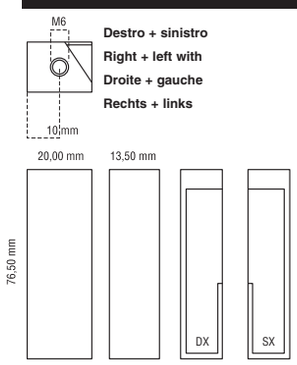

Destro + sinistro
Right + left with
Droite + gauche
Rechts + links

Reggitubo per tubo rettangolare 25 x 10 mm o 30 x 10 mm
Closet tube support holder for rectangular tube 25 x 10 mm or 30 x 10 mm
Support pour tube rectangulaire 25 x 10 mm ou 30 x 10 mm
Halterung für rechteckiges Rohr 25 x 10 mm - 30 x 10 mm

FISSAGGIO - FIXING - FIXAGE - FIXIERUNG

Vite 6MA
6MA screw
Vis 6MA
Gewindebohrung 6MA

MATERIALE - MATERIAL - MATIÉRE - MATERIAL

Zama - Zamak - Zamac - Zamak.

FINITURE - FINISHES - EXECUTIONS - AUSFUEHAUNGEN

Cromato - ottonato. Verniciatura epossidica tutti i colori.
Chromed - brass plated. Epoxy painting every colour.
Chromé - laitonné. Peinture Epoxide chaque couleur.
Verchromt - vermessingt. Epoxy Lackierung jeder Farbe.

ART. M797/C

Centrale
central
Cntral
Zentral

Reggitubo per tubo rettangolare 25 x 10 mm o 30 x 10 mm
Closet tube support holder for rectangular tube 25 x 10 mm or 30 x 10 mm
Support pour tube rectangulaire 25 x 10 mm ou 30 x 10 mm
Halterung für rechteckiges Rohr 25 x 10 mm - 30 x 10 mm

FISSAGGIO - FIXING - FIXAGE - FIXIERUNG

Vite 6MA
6MA screw
Vis 6MA
Gewindebohrung 6MA

MATERIALE - MATERIAL - MATIÉRE - MATERIAL

Zama - Zamak - Zamac - Zamak.

FINITURE - FINISHES - EXECUTIONS - AUSFUEHAUNGEN

Cromato - ottonato - nichelato. Verniciatura epossidica tutti i colori.
Chromed - brass plated - nickeled. Epoxy painting every colour.
Chromé - laitonné - nickelé. Peinture Epoxide chaque couleur.
Verchromt - vermessingt - vernickelt. Epoxy Lackierung jeder Farbe.

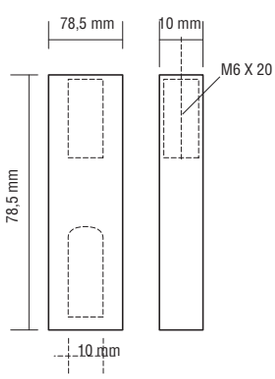

ART. M776

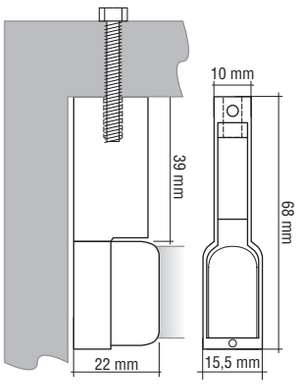

Reggitubo per tubo semiovale 30x15 mm.
Rod holder for semioval rod 30x15 mm.
Support pour tube semi-ovale 30x15 mm.
Halterung für halbovales Rohr 30x15 mm.

FISSAGGIO - FIXING - FIXAGE - FIXIERUNG

Vite 6MA
6MA screw
Vis 6MA
Gewindebohrung 6MA

MATERIALE - MATERIAL - MATIÉRE - MATERIAL

Zama - Zamak - Zamac - Zamak.

FINITURE - FINISHES - EXECUTIONS - AUSFUEHAUNGEN

Cromato - ottonato - nichelato. Verniciatura epossidica tutti i colori.
Chromed - brass plated - nickeled. Epoxy painting every colour.
Chromé - laitonné - nickelé. Peinture Epoxide chaque couleur.
Verchromt - vermessingt - vernickelt. Epoxy Lackierung jeder Farbe.

ART. M777

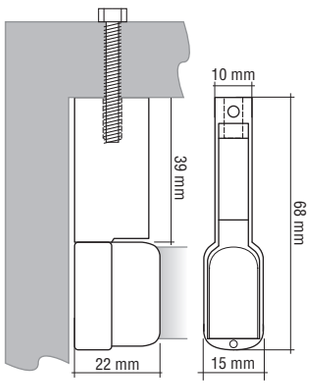

Reggitubo per tubo ovale 30x15 mm.
Rod holder for oval rod 30x15 mm.
Support pour tube oval 30x15 mm.
Halterung für oval Rohr 30x15 mm.

FISSAGGIO - FIXING - FIXAGE - FIXIERUNG

Vite 6MA
6MA screw
Vis 6MA
Gewindebohrung 6MA

MATERIALE - MATERIAL - MATIÉRE - MATERIAL

Zama - Zamak - Zamac - Zamak.

FINITURE - FINISHES - EXECUTIONS - AUSFUEHAUNGEN

Cromato - ottonato - nichelato. Verniciatura epossidica tutti i colori.
Chromed - brass plated - nickeled. Epoxy painting every colour.
Chromé - laitonné - nickelé. Peinture Epoxide chaque couleur.
Verchromt - vermessingt - vernickelt. Epoxy Lackierung jeder Farbe.

ART. M778

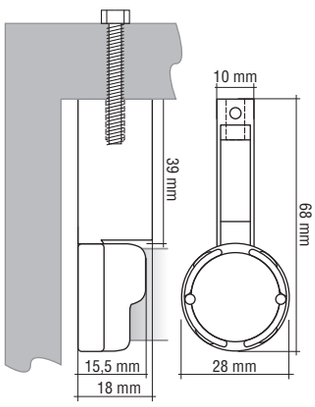

Reggitubo per tubo rotondo Ø 28 mm.
Rod holder for round rod Ø 28 mm.
Support pour tube rond Ø 28 mm.
Halterung für rundes Rohr Ø 28 mm.

FISSAGGIO - FIXING - FIXAGE - FIXIERUNG

Vite 6MA
6MA screw
Vis 6MA
Gewindebohrung 6MA

MATERIALE - MATERIAL - MATIÉRE - MATERIAL

Zama - Zamak - Zamac - Zamak.

FINITURE - FINISHES - EXECUTIONS - AUSFUEHAUNGEN

Cromato - ottonato - nichelato. Verniciatura epossidica tutti i colori.
Chromed - brass plated - nickeled. Epoxy painting every colour.
Chromé - laitonné - nickelé. Peinture Epoxide chaque couleur.
Verchromt - vermessingt - vernickelt. Epoxy Lackierung jeder Farbe.

MANART srl - 23876 MONTICELLO - FRAZ. CORTENUOVA (LC) ITALY - Via T. Moneta, 17 - Tel. 039.920.35.55 - 039.920.26.44 - Fax 039.920.28.01
www.manart.it e-mail: manart@manart.it

ART. M700

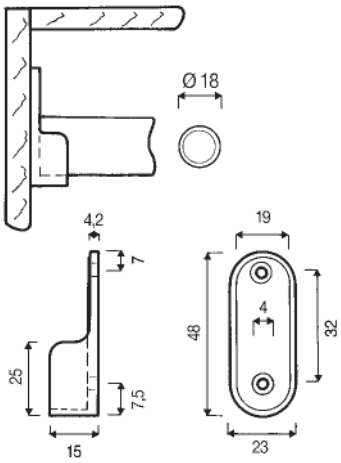

Reggitubo per tubo rotondo Ø 18 mm.
Closet tube support for round tube Ø 18 mm.
Soutien tube pour tube rond Ø 18 mm.
Rohrlager für runde Rohre mit einem Durdimessesser von Ø 18 mm.

FISSAGGIO - FIXING - FIXAGE - FIXIERUNG

2 Fori Ø 4 mm.
2 Screwhole Ø 4 mm.
2 Trous Ø 4 mm.
2 Loechern zu je Ø 4 mm.

MATERIALE - MATERIAL - MATIÈRE - MATERIAL

Zama - Zamak - Zamac - Zamak

FINITURE - FINISHES - EXÉCUTIONS - AUSFUEHRUNGEN

Nichelato - Ottonato - Verniciato epossidico
Nickel plated - Brass plated - Epoxy coated
Fer nichélé - Laitonné - Verni epoxy
Vernickelt - Vermessingt - Epoxydlackiert

ART. M701

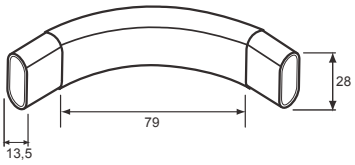

Curva 90° per tubo ovale 30x15 mm.
Curve 90° for oval tube 30x15 mm.
Curve 90° pour tube oval 30x15 mm.
Kurve 90° fuer ovale Rohre 30x15 mm.

MATERIALE - MATERIAL - MATIÈRE - MATERIAL

Zama - Zamak - Zamac - Zamak

FINITURE - FINISHES - EXÉCUTIONS - AUSFUEHRUNGEN

Cromato - Ottonato - Verniciato epossidico
Chrome plated - Brass plated - Epoxy coated
Chrome - Laitonne - Verni epoxy
Verchromt - Vermessingt - Epoxydlackiert

ART. M 716

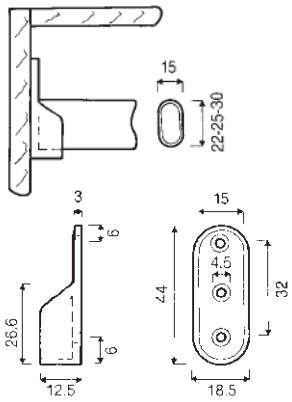

Reggitubo per tubo ovale
Closet tube support for oval tube
Soutien tube pour tube oval
Rohrlager fuer ovale Rohre

FISSAGGIO - FIXING - FIXAGE - FIXIERUNG

3 fori Ø 4,5 mm.
3 Screwhole Ø 4,5 mm.
3 Trous Ø 4,5 mm.
3 Loechern zu je Ø 4,5 mm.

MATERIALE - MATERIAL - MATIÈRE - MATERIAL

Zama - Zamak - Zamac - Zamak

FINITURE - FINISHES - EXÉCUTIONS - AUSFUEHRUNGEN

Nichelato - Ottonato - Verniciato epossidico - Cromato
Nickel plated - Brass plated - Epoxy coated - Chromed
Fer nickélé - Laitonné - Verni epoxy - Chrome
Vernickelt - Vermessingt - Epoxydlackiert - Verchromt

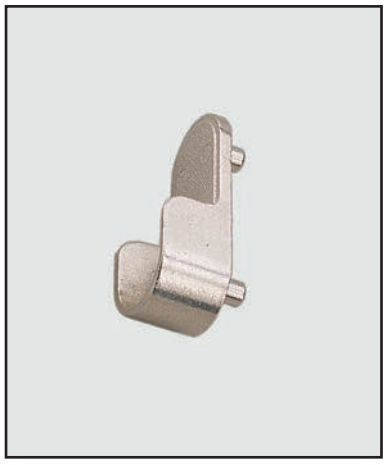

ART. M 717

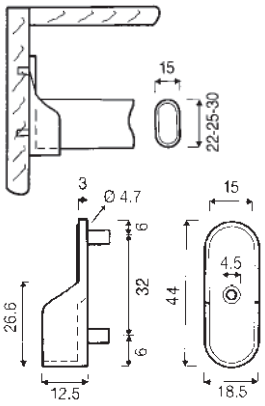

Reggitubo per tubo ovale
Closet tube support for oval tube
Soutien tube pour tube oval
Rohrlager fuer ovale Rohre

FISSAGGIO - FIXING - FIXAGE - FIXIERUNG

2 Perni Ø 4,7 mm.+1 foro Ø 4,5 mm.
2 Pins Ø 4,7 mm.+1 hole Ø 4,5 mm.
2 Chevilles Ø 4,7 mm.+1 trous Ø 4,5 mm.
2 Zapfen zu je Ø 4,7 mm.+1 Rosh Ø 4,5 mm.

MATERIALE - MATERIAL - MATIÈRE - MATERIAL

Zama - Zamak - Zamac - Zamak

FINITURE - FINISHES - EXÉCUTIONS - AUSFUEHRUNGEN

Nichelato - Ottonato - Verniciato epossidico
Nickel plated - Brass plated - Epoxy coated
Fer nickélé - Laitonné - Verni epoxy
Vernickelt - Vermessingt - Epoxydlackiert

ART. M718

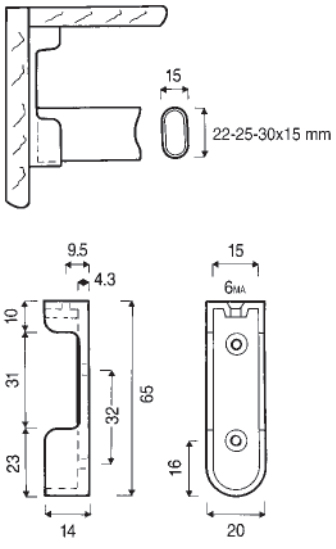

Reggitubo per tubo ovale
Closet tube support for oval tube
Soutien tube pour tube oval
Rohrlager fuer ovale Rohre

FISSAGGIO - FIXING - FIXAGE - FIXIERUNG

2 Fori Ø 4 mm. e vite 6MA
2 Screwhole Ø 4 mm. 6MA screw
2 Trous Ø 4 mm. vis 6MA
2 Loseherm zu je Ø 4 mm. Gewindebohrung 6MA

MATERIALE - MATERIAL - MATIÈRE - MATERIAL

Zama - Zamak - Zamac - Zamak

FINITURE - FINISHES - EXÉCUTIONS - AUSFUEHRUNGEN

Nichelato - Ottonato - Verniciato epossidico - Cromato
Nickel plated - Brass plated - Epoxy coated - Chromed
Fer nickélé - Laitonné - Verni epoxy - Chrome
Vernickelt - Vermessingt - Epoxydlackiert - Verchromt

ART. M719

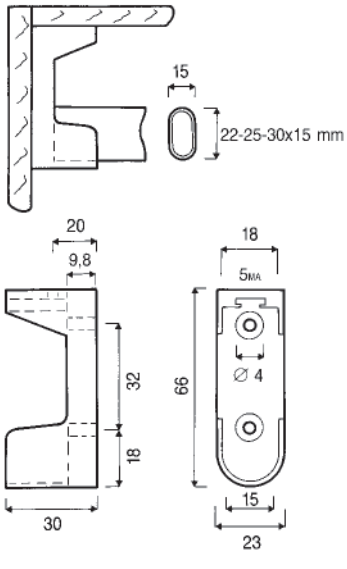

Reggitubo per tubo ovale - Altamente resistente
Closet tube support for oval tube - Extra strong
Soutien tube pour tube oval - Haute resistance
Rohrlager fuer ovale Rohre - Sehr widerstandsfaehiges

FISSAGGIO - FIXING - FIXAGE - FIXIERUNG

2 Fori Ø 4 mm. e vite 5MA
2 Screwhole Ø 4 mm. 5MA screw
2 Trous Ø 4 mm. vis 5MA
2 Loseherm zu je Ø 4 mm. Gewindebohrung 5MA

MATERIALE - MATERIAL - MATIÈRE - MATERIAL

Nylon - Nylon - Nylon - Nylon

FINITURE - FINISHES - EXÉCUTIONS - AUSFUEHRUNGEN

Bianco - Nero - Marrone
White - Black - Brown
Blanc - Noir - Marron
Weiss - Schwarz - Braun

ART. M720

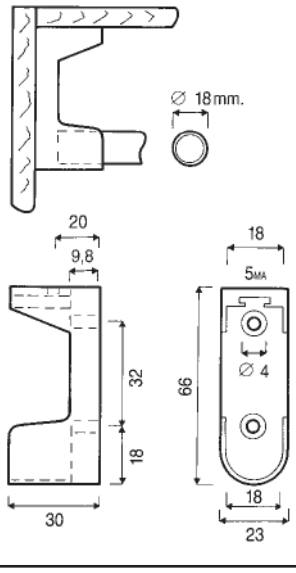

Reggitubo per tubo rotondo Ø 18 mm. - Altamente resistente
Closet tube support for round tube Ø 18 mm. - Extra strong
Soutien tube pour tube rond Ø 18 mm. - Haute resistance
Rohrlager fuer runde Rohre mit einem Durdimessesser von Ø 18 - Sehr widerstandsfaehiges

FISSAGGIO - FIXING - FIXAGE - FIXIERUNG

2 Fori Ø 4 mm. e vite 5MA
2 Screwhole Ø 4 mm. 5MA screw
2 Trous Ø 4 mm. vis 5MA
2 Loseherm zu je Ø 4 mm. Gewindebohrung 5MA

MATERIALE - MATERIAL - MATIÈRE - MATERIAL

Nylon - Nylon - Nylon - Nylon

FINITURE - FINISHES - EXÉCUTIONS - AUSFUEHRUNGEN

Bianco - Nero - Marrone
White - Black - Brown
Blanc - Noir - Marron
Weiss - Schwarz - Braun

MANART srl - 23876 MONTICELLO (LC) - Via T. Moneta, 17 - Fraz. Cortenuova - Tel. 039.9203555 - 039.9202644 - Fax 039.9202801
e-mail: manart@manart.it - www.manart.it

ART. M721

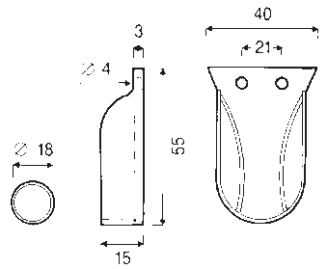

Reggitubo per tubo rotondo Ø 18 mm.
Closet tube support for round tube Ø 18 mm.
Soutien tube pour tube rond Ø 18 mm.
Rohrlager fuer runde Rohre Ø 18 mm.

FISSAGGIO - FIXING - FIXAGE - FIXIERUNG

2 Fori Ø 4 mm.
2 Screwhole Ø 4 mm.
2 Trous Ø 4 mm.
2 Loseherm zu je Ø 4 mm.

MATERIALE - MATERIAL - MATIÈRE - MATERIAL

Polistirolo
Polystyrene
Polystirene
Polystirol

FINITURE - FINISHES - EXÉCUTIONS - AUSFUEHRUNGEN

Bianco - Marrone
White - Brown
Blanc - Marron
Weiss - Braun

ART. M722

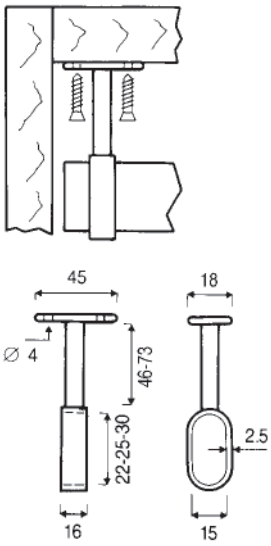

Reggitubo regolabile per tubo ovale - 30x15 mm.**
Closet tube support, adjustable, for oval tube - 30x15 mm.
Soutien tube, hauter reglable, pour tube oval - 30x15 mm.
Verstellbares Rohrlager fuer ovale Rohre - 30x15 mm.

FISSAGGIO - FIXING - FIXAGE - FIXIERUNG

2 Fori Ø 4 mm.
2 Screwhole Ø 4 mm.
2 Trous Ø 4 mm.
2 Loseherm zu je Ø 4 mm.

MATERIALE - MATERIAL - MATIÈRE - MATERIAL

Zama - Zamak - Zamac - Zamak

FINITURE - FINISHES - EXÉCUTIONS - AUSFUEHRUNGEN

Cromato - Ottonato - verniciato epossidico
Chromed - Brass plated - Epoxy coated
Chrome - Laitonné - Verni epoxy
Verchromt - Vermessingt - Epoxydlackiert

** Disponibile aperto su due lati o chiuso su un lato - Specificare nell'ordine
Available on side or two side open (on request)
Deux types: un cote ouvert deux cotes ouverts (à spécifier)
Entweder an beiden Seiten oder nur an einer Seite offen, anzugeben

ART. M723

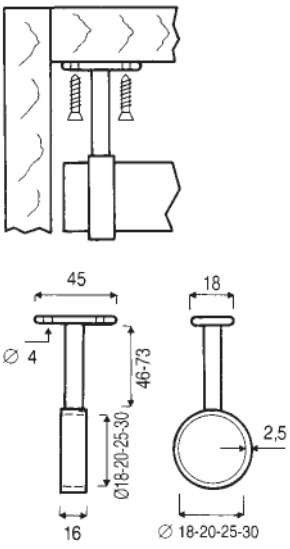

Reggitubo regolabile per tubo rotondo**
Closet tube support, adjustable, for round tube
Soutien tube, hauter reglable, pour tube rond
Verstellbares Rohrlager fuer runde Rohre

A = Ø 18 mm. tubo/tube/tube/rohr - B = Ø 20 mm. tubo/tube/tube/rohr
C = Ø 25 mm. tubo/tube/tube/rohr - D = Ø 30 mm. tubo/tube/tube/rohr

FISSAGGIO - FIXING - FIXAGE - FIXIERUNG

2 Fori Ø 4 mm. - 2 Screwhole Ø 4 mm.
2 Trous Ø 4 mm. - 2 Loseherm zu je Ø 4 mm.

MATERIALE - MATERIAL - MATIÈRE - MATERIAL

Zama - Zamak - Zamac - Zamak

FINITURE - FINISHES - EXÉCUTIONS - AUSFUEHRUNGEN

Cromato - Ottonato - Verniciato epossidico
Chromed - Brass plated - Epoxy coated
Chrome - Laitonné - Verni epoxy
Verchromt - Vermessingt - Epoxydlackiert

** Disponibile aperto su due lati o chiuso su un lato - Specificare nell'ordine
Available on side or two side open (on request)
Deux types: un cote ouvert deux cotes ouverts (à spécifier)
Entweder an beiden Seiten oder nur an einer Seite offen, anzugeben

ART. M724

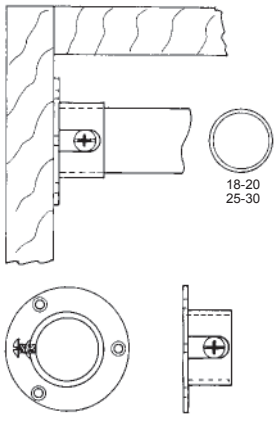

Ghiera fissa per tubo rotondo con vite
Fixed flange - round tube with screw
Palier de baton rond avec vis
Stangenlager für Rundrohre mit Schraube

A = Ø 18 mm. tubo/tube/tube/rohr - B = Ø 20 mm. tubo/tube/tube/rohr
C = Ø 25 mm. tubo/tube/tube/rohr - D = Ø 30 mm. tubo/tube/tube/rohr

FISSAGGIO - FIXING - FIXAGE - FIXIERUNG

3 Fori Ø 4 mm. — 3 Trous Ø 4 mm.
3 Screwholes Ø 4 mm. — 3 Loecher Ø 4 mm.

MATERIALE - MATERIAL - MATIÈRE - MATERIAL

Zama - Zamak - Zamac - Zamak

FINITURE - FINISHES - EXÉCUTIONS - AUSFUEHRUNGEN

Cromato - Ottonato - Verniciato epossidico
Chrome Plated - Brass Plated - Epoxy coated
Chrome - Laitonné - Verni epoxy
Verchromt - Vermessingt - Epoxydlackiert

ART. M725

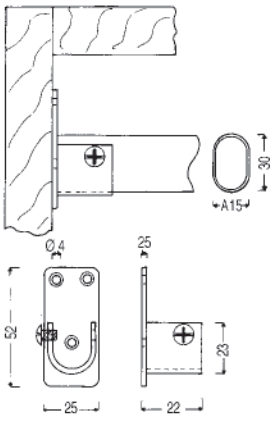

Reggitubo per tubo ovale con vite laterale
Close tube support - oval tube with side screw
Palier de baton oval avec vis laterale
Stagenlager für ovalrohre mit seitenschraube

22/25/30x15 mm. tubo/tube/tube/rohr

FISSAGGIO - FIXING - FIXAGE - FIXIERUNG

3 Fori Ø 4 mm. — 3 Trous Ø 4 mm.
3 Screwholes Ø 4 mm. — 3 Loecher Ø 4 mm.

MATERIALE - MATERIAL - MATIÈRE - MATERIAL

Zama - Zamak - Zamac - Zamak

FINITURE - FINISHES - EXÉCUTIONS - AUSFUEHRUNGEN

Cromato - Ottonato - Verniciato epossidico
Chrome Plated - Brass Plated - Epoxy coated
Chrome - Laitonné - Verni epoxy
Verchromt - Vermessingt - Epoxydlackiert

ART. M726

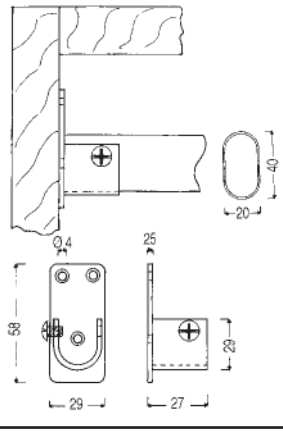

Reggitubo per tubo ovale con vite laterale
Closet tube support - oval tube with side screw
Palier de baton oval avec vis laterale
Stagenlager für ovalrohre mit seitenschraube

40x20 mm. tubo/tube/tube/rohr

FISSAGGIO - FIXING - FIXAGE - FIXIERUNG

3 Fori Ø 4 mm. — 3 Trous Ø 4 mm.
3 Screwholes Ø 4 mm. — 3 Loecher Ø 4 mm.

MATERIALE - MATERIAL - MATIÈRE - MATERIAL

Zama - Zamak - Zamac - Zamak

FINITURE - FINISHES - EXÉCUTIONS - AUSFUEHRUNGEN

Cromato - Ottonato - Verniciato epossidico
Chrome Plated - Brass Plated - Epoxy coated
Chrome - Laitonné - Verni epoxy
Verchromt - Vermessingt - Epoxydlackiert

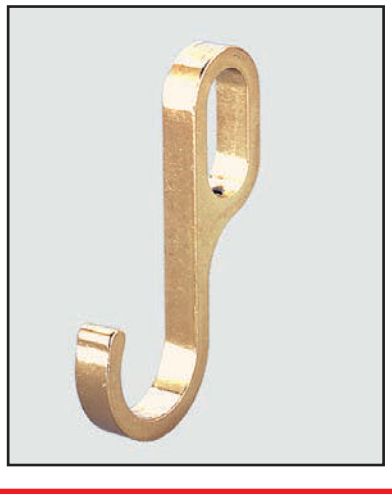

ART. M727

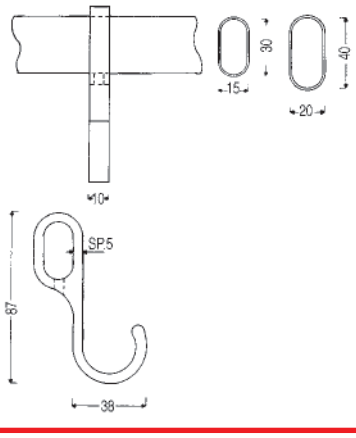

Gancio appenditubo
Universal hook
Crochet universel
Universalhaken

A = 30x15 mm. tubo ovale/oval tube/tube oval/ovalrohr
B = 40x20 mm. tubo ovale/oval tube/tube oval/ovalrohr

FISSAGGIO - FIXING - FIXAGE - FIXIERUNG

3 Fori Ø 4 mm. — 3 Trous Ø 4 mm.
3 Screwholes Ø 4 mm. — 3 Loecher Ø 4 mm.

MATERIALE - MATERIAL - MATIÈRE - MATERIAL

Zama - Zamak - Zamac - Zamak

FINITURE - FINISHES - EXÉCUTIONS - AUSFUEHRUNGEN

Cromato - Ottonato - Verniciato epossidico
Chrome Plated - Brass Plated - Epoxy coated
Chrome - Laitonné - Verni epoxy
Verchromt - Vermessingt - Epoxydlackiert

MANART srl - 23876 MONTICELLO (LC) - Via T. Moneta, 17 - Fraz. Cortenuova - Tel. 039.9203555 - 039.9202644 - Fax 039.9202801
e-mail: manart@manart.it - www.manart.it

ART. M728

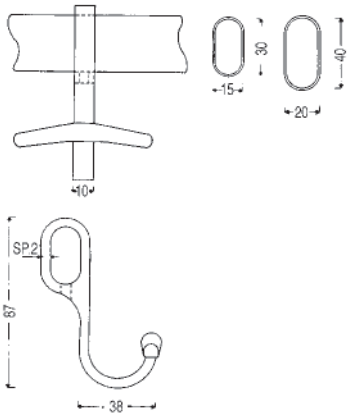

Spallina appenditutto
Garmet hook
Crochet
Klleiderhaken

A = 30x15 mm. tubo ovale/oval tube/tube oval/ovalrohr
B = 40x20 mm. tubo ovale/oval tube/tube oval/ovalrohr

MATERIALE - MATERIAL - MATIÈRE - MATERIAL

Zama - Zamak - Zamac - Zamak

FINITURE - FINISHES - EXÉCUTIONS - AUSFUEHRUNGEN

Cromato - Ottonato - Verniciato epossidico
Chrome Plated - Brass Plated - Epoxy coated
Chrome - Laitonné - Verni epoxy
Verchromt - Vermessingt - Epoxydlackiert

ART. M729

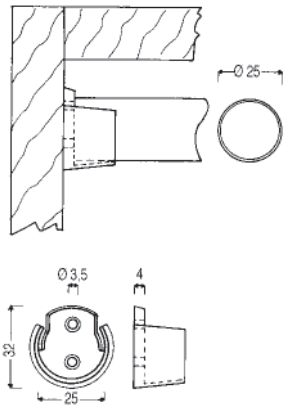

Reggitubo per tubo rotondo Ø 25 mm.
Closet tube support - round tube Ø 25 mm.
Palier de baton, rond Ø 25 mm.
Stagenlager für rundrohre Ø 25 mm.

FISSAGGIO - FIXING - FIXAGE - FIXIERUNG

2 Fori Ø 3,5 mm.
2 Screwholes Ø 3,5 mm.
2 Trous Ø 3,5 mm.
2 Loecher Ø 3,5 mm.

MATERIALE - MATERIAL - MATIÈRE - MATERIAL

Nylon

FINITURE - FINISHES - EXÉCUTIONS - AUSFUEHRUNGEN

Bianco - Marrone
White - Brown
Blanc - Marron

ART. M730

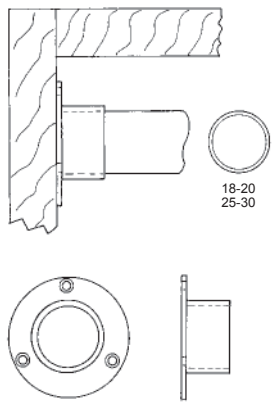

Ghiera fissa per tubo rotondo
Fixed flange - round tube
Palier de baton, rond
Stangenlager für Rundrohre

A = Ø 18 mm. tubo/tube/tube/rohr - B = Ø 20 mm. tubo/tube/tube/rohr
C = Ø 25 mm. tubo/tube/tube/rohr - D = Ø 30 mm. tubo/tube/tube/rohr

FISSAGGIO - FIXING - FIXAGE - FIXIERUNG

3 Fori Ø 4 mm.
3 Screwholes Ø 4 mm.
3 Trous Ø 4 mm.
3 Loecher Ø 4 mm.

MATERIALE - MATERIAL - MATIÈRE - MATERIAL

Zama - Zamak - Zamac - Zamak

FINITURE - FINISHES - EXÉCUTIONS - AUSFUEHRUNGEN

Cromato - Ottonato - Verniciato epossidico
Chrome Plated - Brass Plated - Epoxy coated
Chrome - Laitonné - Verni epoxy
Verchromt - Vermessingt - Epoxydlackiert

ART. M731

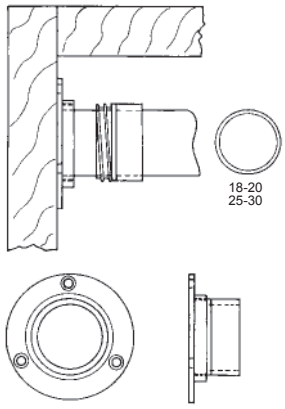

Ghiera smontabile per tubo rotondo
Detachable flange - round tube
Palier de baton rond, detachable
Stangenlager für Rundrohre, abnehmbar

A = Ø 18 mm. tubo/tube/tube/rohr - B = Ø 20 mm. tubo/tube/tube/rohr
C = Ø 25 mm. tubo/tube/tube/rohr - D = Ø 30 mm. tubo/tube/tube/rohr

FISSAGGIO - FIXING - FIXAGE - FIXIERUNG

3 Fori Ø 4 mm.
3 Screwholes Ø 4 mm.
3 Trous Ø 4 mm.
3 Loecher Ø 4 mm.

MATERIALE - MATERIAL - MATIÈRE - MATERIAL

Zama - Zamak - Zamac - Zamak

FINITURE - FINISHES - EXÉCUTIONS - AUSFUEHRUNGEN

Cromato - Ottonato - Verniciato epossidico
Chrome Plated - Brass Plated - Epoxy coated
Chrome - Laitonné - Verni epoxy
Verchromt - Vermessingt - Epoxydlackiert

ART. M732

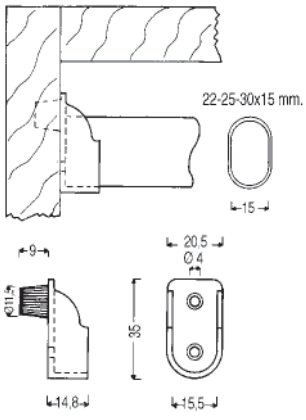

Reggitubo per tubo ovale
Closet tube support - oval tube
Palier de baton oval
Stagenlager für ovalrohre

FISSAGGIO - FIXING - FIXAGE - FIXIERUNG

1 Perno Ø 11,5 - 1 Foro Ø 4 mm.
1 Pin Ø 11,5 - 1 Screwhole Ø 4 mm.
1 Pivot Ø 11,5 - 1 Trou Ø 4 mm.
1 Bolzen Ø 11,5 - 1 Loseherm zu je Ø 4 mm.

MATERIALE - MATERIAL - MATIÈRE - MATERIAL

Zama - Zamak - Zamac - Zamak

FINITURE - FINISHES - EXÉCUTIONS - AUSFUEHRUNGEN

Nichelato - Ottonato - Verniciato epossidico
Nickel Plated - Brass Plated - Epoxy coated
Nickélé - Laitonné - Verni epoxy
Vernickelt - Vermessingt - Epoxydlackiert

ART. M733

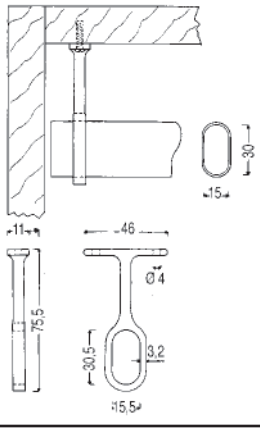

Reggitubo per tubo ovale 30x15 mm.
Close tube support - oval tube 30x15 mm.
Palier de baton oval 30x15 mm.
Stagenlager für ovalrohre 30x15 mm.

FISSAGGIO - FIXING - FIXAGE - FIXIERUNG

2 Fori Ø 4 mm.
2 Screwholes Ø 4 mm.
2 Trous Ø 4 mm.
2 Loecher Ø 4 mm.

MATERIALE - MATERIAL - MATIÈRE - MATERIAL

Zama - Zamak - Zamac - Zamak

FINITURE - FINISHES - EXÉCUTIONS - AUSFUEHRUNGEN

Cromato - Ottonato - Verniciato epossidico
Chrome Plated - Brass Plated - Epoxy coated
Chrome - Laitonné - Verni epoxy
Verchromt - Vermessingt - Epoxydlackiert

ART. M734

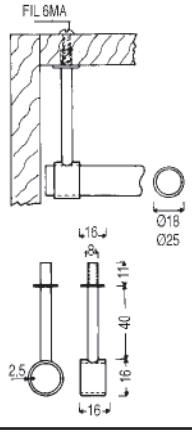

Reggitubo per tubo rotondo
Closet tube support - round tube
Palier de baton rond
Stagenlager für rundrohre

A = Ø 18 mm. tubo/tube/tube/rohr - B = Ø 25 mm. tubo/tube/tube/rohr

FISSAGGIO - FIXING - FIXAGE - FIXIERUNG

Vite 6MA
6MA screw
Vis 6MA
Gewindebohrung 6MA

MATERIALE - MATERIAL - MATIÈRE - MATERIAL

Zama - Zamak - Zamac - Zamak

FINITURE - FINISHES - EXÉCUTIONS - AUSFUEHRUNGEN

Cromato - Ottonato - Verniciato epossidico
Chrome Plated - Brass Plated - Epoxy coated
Chrome - Laitonné - Verni epoxy
Verchromt - Vermessingt - Epoxydlackiert

ART. M735

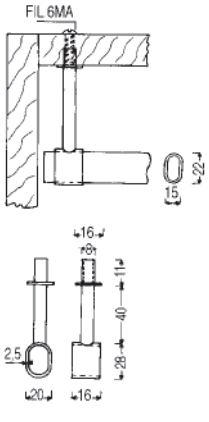

Reggitubo per tubo ovale 22x15 mm.
Closet tube support - oval tube 22x15 mm.
Palier de baton oval 22x15 mm.
Stagenlager für ovalrohre 22x15 mm.

FISSAGGIO - FIXING - FIXAGE - FIXIERUNG

Vite 6MA
6MA screw
Vis 6MA
Gewindebohrung 6MA

MATERIALE - MATERIAL - MATIÈRE - MATERIAL

Zama - Zamak - Zamac - Zamak

FINITURE - FINISHES - EXÉCUTIONS - AUSFUEHRUNGEN

Cromato - Ottonato - Verniciato epossidico
Chrome Plated - Brass Plated - Epoxy coated
Chrome - Laitonné - Verni epoxy
Verchromt - Vermessingt - Epoxydlackiert

MANART srl - 23876 MONTICELLO (LC) - Via T. Moneta, 17 - Fraz. Cortenuova - Tel. 039.9203555 - 039.9202644 - Fax 039.9202801
e-mail: manart@manart.it - www.manart.it

ART. M736

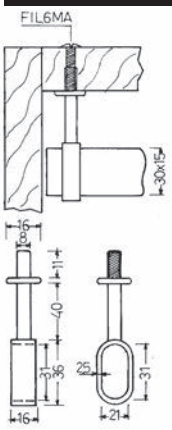

Reggitubo per tubo ovale 30x15 mm.
Closet tube support - oval tube 30x15 mm.
Palier de baton oval 30x15 mm.
Stagenlager für ovalrohre 30x15 mm.

FISSAGGIO - FIXING - FIXAGE - FIXIERUNG

Vite 6MA
6MA screw
Vis 6MA
Gewindebohrung 6MA

MATERIALE - MATERIAL - MATIÈRE - MATERIAL

Zama - Zamak - Zamac - Zamak

FINITURE - FINISHES - EXÉCUTIONS - AUSFUEHRUNGEN

Cromato - Ottonato - Verniciato epossidico
Chrome Plated - Brass Plated - Epoxy coated
Chrome - Laitonne - Verni epoxy
Verchromt - Vermessingt - Epoxydlackiert

ART. M737

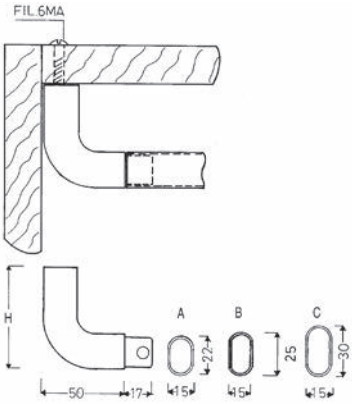

Reggitubo per tubo ovale
Closet tube support - oval tube
Palier de baton oval
Stagenlager für ovalrohre

A = 22x15 mm. tubo/tube/tube/rohr h. 65 mm.
B = 25x15 mm. tubo/tube/tube/rohr h. 65 mm.
C = 30x15 mm. tubo/tube/tube/rohr h. 68 mm.

FISSAGGIO - FIXING - FIXAGE - FIXIERUNG

Vite 6MA - 6M screw - Vis 6M - Gewindebohrung 6M

MATERIALE - MATERIAL - MATIÈRE - MATERIAL

Zama - Zamak - Zamac - Zamak

FINITURE - FINISHES - EXÉCUTIONS - AUSFUEHRUNGEN

Cromato - Ottonato - Verniciato epossidico
Chrome Plated - Brass Plated - Epoxy coated
Chrome - Laitonne - Verni epoxy
Verchromt - Vermessingt - Epoxydlackiert

ART. M738 A-C

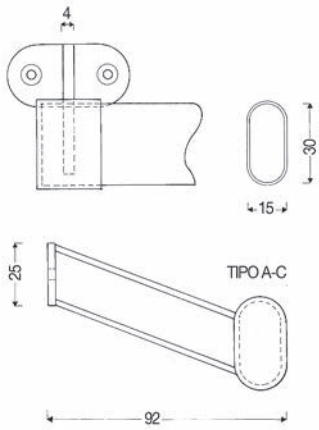

Supporti inclinati per tubo ovale 30x15 mm.
Closet tube support - oval tube 30x15 mm.
Palier de baton oval, 30x15 mm.
Stagenlager für ovalrohre, 30x15 mm.

FISSAGGIO - FIXING - FIXAGE - FIXIERUNG

2 Fori Ø 4 mm.	2 Trous Ø 4 mm.
2 Screwholes Ø 4 mm.	2 Loecher Ø 4 mm.

MATERIALE - MATERIAL - MATIÈRE - MATERIAL

Zama - Zamak - Zamac - Zamak

FINITURE - FINISHES - EXÉCUTIONS - AUSFUEHRUNGEN

Cromato - Ottonato - Verniciato epossidico
Chrome Plated - Brass Plated - Epoxy coated
Chrome - Laitonné - Verni epoxy
Verchromt - Vermessingt - Epoxydlackiert

A = laterale sinistra chiuso da un lato/end cap, left hand/ capuchon, gauche/stangenlager, links
C = laterale destro chiuso da un lato/end cap, right hand/ capuchon, droit/stangenlager, rechts

ART. M738 B

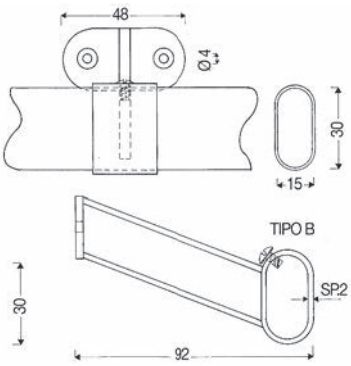

Supporti inclinati per tubo ovale 30x15 mm.
Closet tube support - oval tube 30x15 mm.
Palier de baton oval, 30x15 mm.
Stagenlager für ovalrohre, 30x15 mm.

B = centrale con vite di fissaggio/center, with fixing screw/ support central, avec vis de fixage/mitte, mit Befestigungsschraube

ART. M739

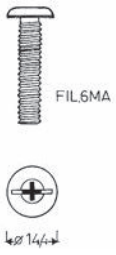

Vite TB larga combinata 6MA x 25 mm.
Button head combined screw, thread M6 x 25 mm.
Vis avec tête ovale, filet M6 x 25 mm.
Linsenkopfschraube, M6 x 25 mm.

MATERIALE - MATERIAL - MATIÈRE - MATERIAL

Acciaio - Steel - Fer - Stahl

FINITURE - FINISHES - EXÉCUTIONS - AUSFUEHRUNGEN

Zincato - Ottonato - Nichelato
Zinc Plated - Brass Plated - Nickel Plated
Zingué - Laitonne - Nickélé
Verzinkt - Vermessingt - Vernickelt

ART. M740

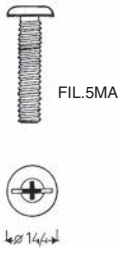

Vite TB larga combinata 5MA
Button head combined screw, thread M5
Vis avec tête ovale, filet M5
Linsenkopfschraube, M5

MATERIALE - MATERIAL - MATIÈRE - MATERIAL

Acciaio - Steel - Fer - Stahl

FINITURE - FINISHES - EXÉCUTIONS - AUSFUEHRUNGEN

Zincato - Ottonato - Nichelato
Zinc Plated - Brass Plated - Nickel Plated
Zingué - Laitonne - Nickélé
Verzinkt - Vermessingt - Vernickelt

ART. M741

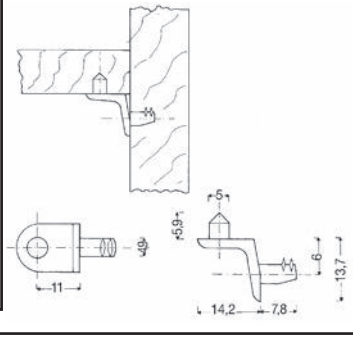

Reggipiano 1 perno - 1 spina
Shelf support 1 pivot - 1 pin
Support d'étagère1 pivot - 1 cheville
Bodentraeger 1 Bolzen - 1 Stift

MATERIALE - MATERIAL - MATIÈRE - MATERIAL

Zama - Zamak - Zamac - Zamak

FINITURE - FINISHES - EXÉCUTIONS - AUSFUEHRUNGEN

Nichelato - Bronzato - Ottonato - Zincato Nero
Nickel Plated - Bronze Plated - Brass Plated - Zinc Plated Black
Nickélé - Bronze - Laitonne - Zingué Noir
Vernickelt - Vermessingt - Schwarz-Vernickelt

ART. M742

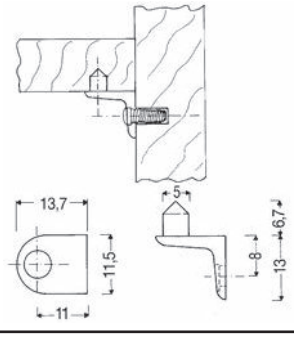

Reggipiano 1 foro - 1 perno
Shelf support 1 hole - 1 pin
Support d'étagère 1 trou - 1 pivot
Bodentraeger 1 Bohrung - 1 Bolzen

MATERIALE - MATERIAL - MATIÈRE - MATERIAL

Zama - Zamak - Zamac - Zamak

FINITURE - FINISHES - EXÉCUTIONS - AUSFUEHRUNGEN

Nichelato - Bronzato - Ottonato - Zincato Nero
Nickel Plated - Bronze Plated - Brass Plated - Zinc Plated Black
Nickélé - Bronze - Laitonne - Zingué Noir
Vernickelt - Vermessingt - Schwarz-Vernickelt

ART. M743

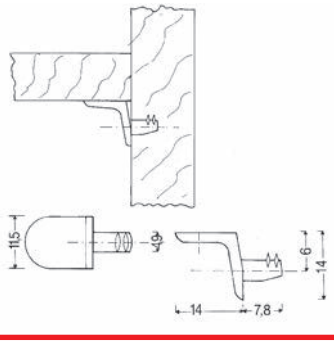

Reggipiano 1 spina
Shelf support 1 pin
Support d'étagère 1 cheville
Bodentraeger 1 Stift

MATERIALE - MATERIAL - MATIÈRE - MATERIAL

Zama - Zamak - Zamac - Zamak

FINITURE - FINISHES - EXÉCUTIONS - AUSFUEHRUNGEN

Nichelato - Bronzato - Ottonato - Zincato Nero
Nickel Plated - Bronze Plated - Brass Plated - Zinc Plated Black
Nickélé - Bronze - Laitonne - Zingué Noir
Vernickelt - Vermessingt - Schwarz-Vernickelt

MANART srl - 23876 MONTICELLO (LC) - Via T. Moneta, 17 - Fraz. Cortenuova - Tel. 039.9203555 - 039.9202644 - Fax 039.9202801
e-mail: manart@manart.it - www.manart.it

ART. M744

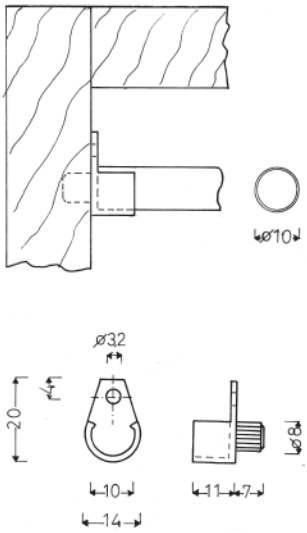

Reggitubo per tubo rotondo Ø 10 mm.
Closet tube support, round tube Ø 10 mm.
Palier de baton, rond Ø 10 mm.
Stangenlager für rundrohre Ø 10 mm.

FISSAGGIO - FIXING - FIXAGE - FIXIERUNG

1 Perno Ø 8 mm. - 1 Foro Ø 3,2 mm.
1 Pin Ø 8 mm. - 1 Screwhole Ø 3,2 mm.
1 Cheville Ø 8 mm. - 1 Trou Ø 3,2 mm.
1 Bolzen Ø 8 mm. - 1 Bohrung Ø 3,2 mm.

MATERIALE - MATERIAL - MATIÈRE - MATERIAL

Nylon

FINITURE - FINISHES - EXÉCUTIONS - AUSFUEHRUNGEN

Bianco - Marrone
White - Brown
Blanc - Marron
Weiss - Braun

ART. M745

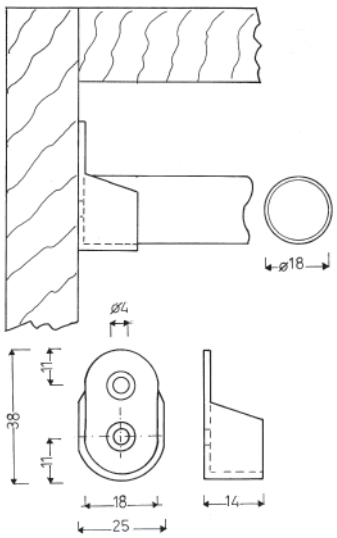

Reggitubo per tubo rotondo Ø 18 mm.
Closet tube support, round tube Ø 18 mm.
Palier de baton, rond Ø 18 mm.
Stagenlager für rundrohre Ø 18 mm.

FISSAGGIO - FIXING - FIXAGE - FIXIERUNG

2 Fori Ø 4 mm.
2 Trous Ø 4 mm.
2 Screwholes Ø 4 mm.
2 Loecher Ø 4 mm.

MATERIALE - MATERIAL - MATIÈRE - MATERIAL

Nylon

FINITURE - FINISHES - EXÉCUTIONS - AUSFUEHRUNGEN

Bianco - Marrone
White - Brown
Blanc - Marron
Weiss - Braun

ART. M780

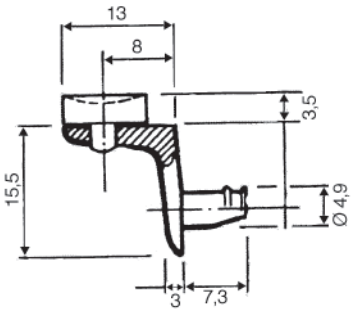

Reggipiano 1 perno
Shelf support 1 pin
Support de sol 1 cheville
Bodentraeger 1 bolzen

MATERIALE - MATERIAL - MATIÈRE - MATERIAL

Zama - Zamak - Zamac - Zamak

FINITURE - FINISHES - EXÉCUTIONS - AUSFUEHRUNGEN

Nichelato - Bronzato - Ottonato - Zincato Nero
Nickel Plated - Bronze Plated - Brass Plated - Zinc Plated Black
Nickélé - Bronze - Laitonne - Zingué Noir
Vernickelt - Vermessingt - Schwarz-Vernickelt

ART. M781

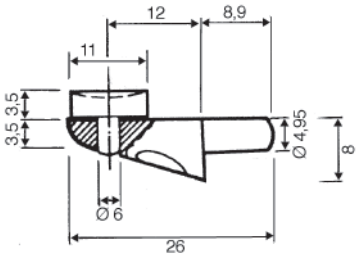

Reggipiano 1 perno
Shelf support 1 pin
Support de sol 1 cheville
Bodentraeger 1 bolzen

MATERIALE - MATERIAL - MATIÈRE - MATERIAL

Zama - Zamak - Zamac - Zamak

FINITURE - FINISHES - EXÉCUTIONS - AUSFUEHRUNGEN

Nichelato - Bronzato - Ottonato - Zincato Nero
Nickel Plated - Bronze Plated - Brass Plated - Zinc Plated Black
Nickélé - Bronze - Laitonne - Zingué Noir
Vernickelt - Vermessingt - Schwarz-Vernickelt

ART. M782

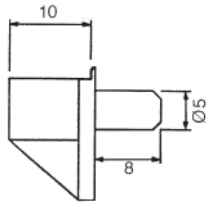

Reggipiano 1 perno
Shelf support 1 pin
Support de sol 1 cheville
Bodentraeger 1 bolzen

MATERIALE - MATERIAL - MATIÈRE - MATERIAL

Acciaio - Steel - Fer - Stahl

FINITURE - FINISHES - EXÉCUTIONS - AUSFUEHRUNGEN

Zincato
Zinc Plated
Zingué
Verzinkt

ART. M783

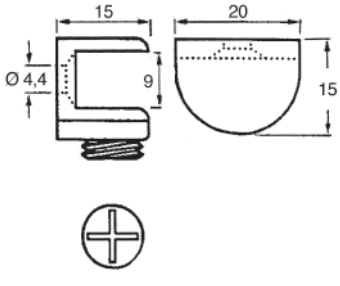

Reggipiano 1 foro
Shelf support 1 screwhole
Support de sol 1 trou
Bodentraeger 1 bohrung

MATERIALE - MATERIAL - MATIÈRE - MATERIAL

Zama - Zamak - Zamac - Zamak

FINITURE - FINISHES - EXÉCUTIONS - AUSFUEHRUNGEN

Nichelato - Bronzato - Ottonato - Zincato Nero
Nickel Plated - Bronze Plated - Brass Plated - Zinc Plated Black
Nickélé - Bronze - Laitonne - Zingué Noir
Vernickelt - Vermessingt - Schwarz-Vernickelt

ART. M784

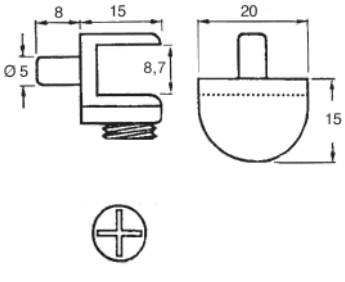

Reggipiano 1 perno
Shelf support 1 pin
Support de sol 1 cheville
Bodentraeger 1 bolzen

MATERIALE - MATERIAL - MATIÈRE - MATERIAL

Zama - Zamak - Zamac - Zamak

FINITURE - FINISHES - EXÉCUTIONS - AUSFUEHRUNGEN

Nichelato - Bronzato - Ottonato - Zincato Nero
Nickel Plated - Bronze Plated - Brass Plated - Zinc Plated Black
Nickélé - Bronze - Laitonne - Zingué Noir
Vernickelt - Vermessingt - Schwarz-Vernickelt

ART. M785

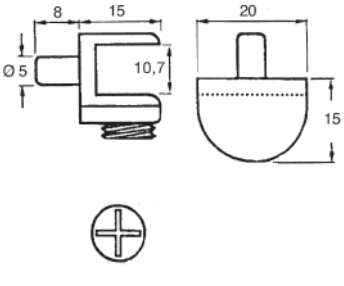

Reggipiano 1 perno
Shelf support 1 pin
Support de sol 1 cheville
Bodentraeger 1 bolzen

MATERIALE - MATERIAL - MATIÈRE - MATERIAL

Zama - Zamak - Zamac - Zamak

FINITURE - FINISHES - EXÉCUTIONS - AUSFUEHRUNGEN

Nichelato - Bronzato - Ottonato - Zincato Nero
Nickel Plated - Bronze Plated - Brass Plated - Zinc Plated Black
Nickélé - Bronze - Laitonne - Zingué Noir
Vernickelt - Vermessingt - Schwarz-Vernickelt

MANART srl - 23876 MONTICELLO (LC) - Via T. Moneta, 17 - Fraz. Cortenuova - Tel. 039.9203555 - 039.9202644 - Fax 039.9202801
e-mail: manart@manart.it - www.manart.it

ART. M702

Gancio appenditubo
Universal hook.
Crocket universal.
Universalhaken.

A = (L) 22x15 mm. tubo ovale
oval tube / tube oval / ovalrohr

B = (L) 30x15 mm. tubo ovale
oval tube / tube oval / ovalrohr

MATERIALE - MATERIAL - MATIÉRE - MATERIAL

Zama - Zamak - Zamac - Zamak.

FINITURE - FINISHES - EXECUTIONS - AUSFUEHAUNGEN

Verniciatura epossidica tutti i colori. Ottonato - Cromato.
Epoxy painting every colour. Brassed - Chromed.
Peinture Epoxide chaque couleur. Laitonné - Chrome.
Epoxy Lackierung jeder Farbe. Vermessingt - Verchromt.

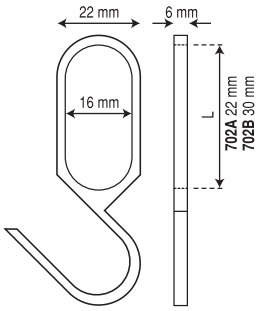

ART. M786

Reggitubo per tubo ovale 30x15 mm e rotondo Ø 25 mm
Closet tube support for oval tube 30x15 mm and round tube Ø 25 mm
Soutien tube pour tube oval 30x15 mm et ronde tube Ø 25 mm
Rohrlager fuer oval Rohre 30x15 mm und rundes Rohr Ø 25 mm

FISSAGGIO - FIXING - FIXAGE - FIXIERUNG

Vite 6MA - 6MA screw - Vis 6MA - Gewindebohrung 6MA

MATERIALE - MATERIAL - MATIÉRE - MATERIAL

Zama - Zamak - Zamac - Zamak.

FINITURE - FINISHES - EXECUTIONS - AUSFUEHAUNGEN

Verniciatura epossidica tutti i colori.
Cromato - ottonato.
Epoxy painting every colour.
Chromed - brass plated.
Peinture Epoxide chaque couleur.
Chromé - laitonné.
Epoxy Lackierung jeder Farbe.
Verchromt - vermessingt.

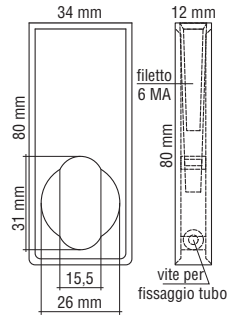

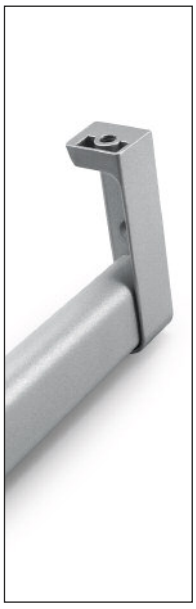

ART. M787

Reggitubo per tubo ovale
Closet tube support for oval tube
Soutien tube pour tube oval
Rohrlager fuer oval Rohre

FISSAGGIO - FIXING - FIXAGE - FIXIERUNG

2 fori Ø 4 mm. e vite 6MA
2 Screwholes Ø 4 mm. and 6MA screw
2 Trous Ø 4 mm. et vis 6MA
2 Loseherm zu je Ø 4 mm. Gewindebohrung 6MA

MATERIALE - MATERIAL - MATIÉRE - MATERIAL

Zama - Zamak - Zamac - Zamak.

FINITURE - FINISHES - EXECUTIONS - AUSFUEHAUNGEN

Verniciatura epossidica tutti i colori. Ottonato - Cromato.
Epoxy painting every colour. Brassed - Chromed.
Peinture Epoxide chaque couleur. Laitonné - Chrome.
Epoxy Lackierung jeder Farbe. Vermessingt - Verchromt.

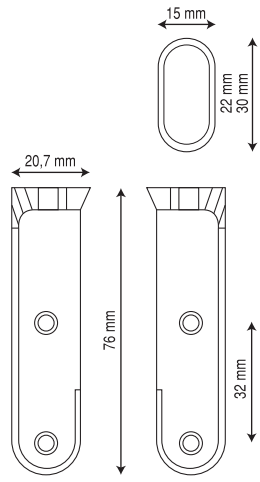

ART. M788

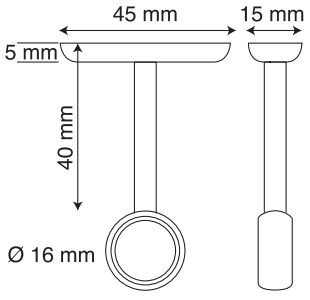

Reggitubo per tubo Ø 16 mm
Close tube support for tube Ø 16 mm
Palier de baton Ø 16 mm
Stagenlager für rohre Ø 16 mm

FISSAGGIO - FIXING - FIXAGE - FIXIERUNG

2 fori Ø 5 mm. - 2 Screwholes Ø 5 mm.
2 Trous Ø 5 mm. - 2 Loecher Ø 5 mm.

MATERIALE - MATERIAL - MATIÉRE - MATERIAL

Zama - Zamak - Zamac - Zamak.

FINITURE - FINISHES - EXECUTIONS - AUSFUEHAUNGEN

Verniciatura epossidica tutti i colori. Ottonato - Cromato.
Epoxy painting every colour. Brassed - Chromed.
Peinture Epoxide chaque couleur. Laitonné - Chrome.
Epoxy Lackierung jeder Farbe. Vermessingt - Verchromt.

ART. M789

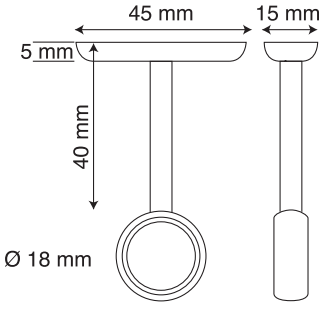

Reggitubo per tubo Ø 18 mm
Close tube support for tube Ø 18 mm
Palier de baton 18 mm
Stagenlager für rohre Ø 18 mm

FISSAGGIO - FIXING - FIXAGE - FIXIERUNG

2 fori Ø 5 mm. - 2 Screwholes Ø 5 mm.
2 Trous Ø 5 mm. - 2 Loecher Ø 5 mm.

MATERIALE - MATERIAL - MATIÉRE - MATERIAL

Zama - Zamak - Zamac - Zamak.

FINITURE - FINISHES - EXECUTIONS - AUSFUEHAUNGEN

Verniciatura epossidica tutti i colori. Ottonato - Cromato.
Epoxy painting every colour. Brassed - Chromed.
Peinture Epoxide chaque couleur. Laitonné - Chrome.
Epoxy Lackierung jeder Farbe. Vermessingt - Verchromt.

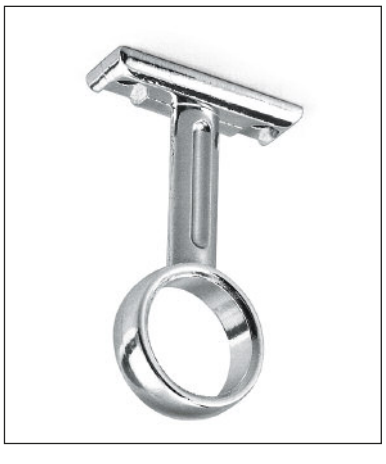

ART. M790

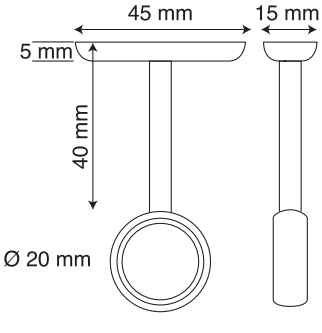

Reggitubo per tubo Ø 20 mm
Close tube support for tube Ø 20 mm
Palier de baton Ø 20 mm
Stagenlager für rohre Ø 20 mm

FISSAGGIO - FIXING - FIXAGE - FIXIERUNG

2 fori Ø 5 mm. - 2 Screwholes Ø 5 mm.
2 Trous Ø 5 mm. - 2 Loecher Ø 5 mm.

MATERIALE - MATERIAL - MATIÉRE - MATERIAL

Zama - Zamak - Zamac - Zamak.

FINITURE - FINISHES - EXECUTIONS - AUSFUEHAUNGEN

Verniciatura epossidica tutti i colori. Ottonato - Cromato.
Epoxy painting every colour. Brassed - Chromed.
Peinture Epoxide chaque couleur. Laitonné - Chrome.
Epoxy Lackierung jeder Farbe. Vermessingt - Verchromt.

ART. M791

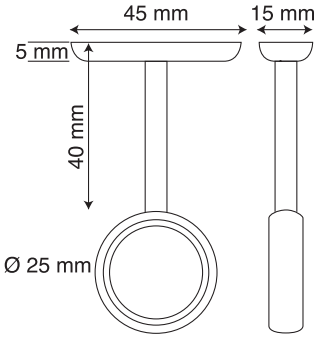

Reggitubo per tubo Ø 25 mm
Close tube support for tube Ø 25 mm
Palier de baton Ø 25 mm
Stagenlager für rohre Ø 25 mm

FISSAGGIO - FIXING - FIXAGE - FIXIERUNG

2 fori Ø 5 mm. - 2 Screwholes Ø 5 mm.
2 Trous Ø 5 mm. - 2 Loecher Ø 5 mm.

MATERIALE - MATERIAL - MATIÉRE - MATERIAL

Zama - Zamak - Zamac - Zamak.

FINITURE - FINISHES - EXECUTIONS - AUSFUEHAUNGEN

Verniciatura epossidica tutti i colori. Ottonato - Cromato.
Epoxy painting every colour. Brassed - Chromed.
Peinture Epoxide chaque couleur. Laitonné - Chrome.
Epoxy Lackierung jeder Farbe. Vermessingt - Verchromt.

ART. M792

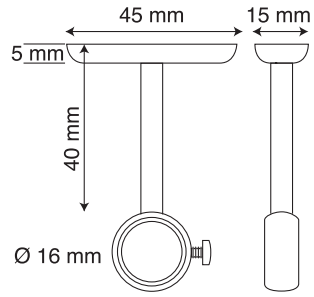

Reggitubo per tubo Ø 16 mm con vite
Close tube support for tube Ø 16 mm with screw
Palier de baton Ø 16 mm avec vis
Stagenlager für rohre Ø 16 mm mit Schrauben

FISSAGGIO - FIXING - FIXAGE - FIXIERUNG

2 fori Ø 5 mm. - 2 Screwholes Ø 5 mm.
2 Trous Ø 5 mm. - 2 Loecher Ø 5 mm.

MATERIALE - MATERIAL - MATIÉRE - MATERIAL

Zama - Zamak - Zamac - Zamak.

FINITURE - FINISHES - EXECUTIONS - AUSFUEHAUNGEN

Verniciatura epossidica tutti i colori. Ottonato - Cromato.
Epoxy painting every colour. Brassed - Chromed.
Peinture Epoxide chaque couleur. Laitonné - Chrome.
Epoxy Lackierung jeder Farbe. Vermessingt - Verchromt.

ART. M793

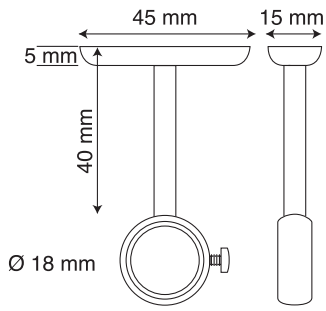

Reggitubo per tubo Ø 18 mm con vite
Close tube support for tube Ø 18 mm with screw
Palier de baton Ø 18 mm avec vis
Stagenlager für rohre Ø 18 mm mit Schrauben

FISSAGGIO - FIXING - FIXAGE - FIXIERUNG

2 fori Ø 5 mm. - 2 Screwholes Ø 5 mm.
2 Trous Ø 5 mm. - 2 Loecher Ø 5 mm.

MATERIALE - MATERIAL - MATIÉRE - MATERIAL

Zama - Zamak - Zamac - Zamak.

FINITURE - FINISHES - EXECUTIONS - AUSFUEHAUNGEN

Verniciatura epossidica tutti i colori. Ottonato - Cromato.
Epoxy painting every colour. Brassed - Chromed.
Peinture Epoxide chaque couleur. Laitonné - Chrome.
Epoxy Lackierung jeder Farbe. Vermessingt - Verchromt.

ART. M794

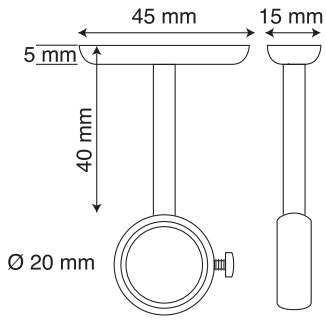

Reggitubo per tubo Ø 20 mm con vite
Close tube support for tube Ø 20 mm with screw
Palier de baton Ø 20 mm avec vis
Stagenlager für rohre Ø 20 mm mit Schrauben

FISSAGGIO - FIXING - FIXAGE - FIXIERUNG

2 fori Ø 5 mm. - 2 Screwholes Ø 5 mm.
2 Trous Ø 5 mm. - 2 Loecher Ø 5 mm.

MATERIALE - MATERIAL - MATIÉRE - MATERIAL

Zama - Zamak - Zamac - Zamak.

FINITURE - FINISHES - EXECUTIONS - AUSFUEHAUNGEN

Verniciatura epossidica tutti i colori. Ottonato - Cromato.
Epoxy painting every colour. Brassed - Chromed.
Peinture Epoxide chaque couleur. Laitonné - Chrome.
Epoxy Lackierung jeder Farbe. Vermessingt - Verchromt.

ART. M795

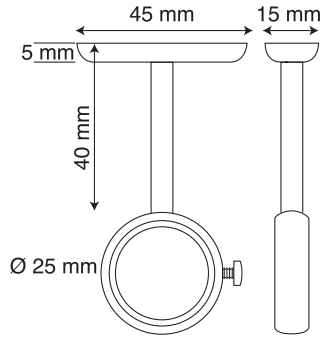

Reggitubo per tubo Ø 25 mm con vite
Close tube support for tube Ø 25 mm with screw
Palier de baton Ø 25 mm avec vis
Stagenlager für rohre Ø 25 mm mit Schrauben

FISSAGGIO - FIXING - FIXAGE - FIXIERUNG

2 fori Ø 5 mm. - 2 Screwholes Ø 5 mm.
2 Trous Ø 5 mm. - 2 Loecher Ø 5 mm.

MATERIALE - MATERIAL - MATIÉRE - MATERIAL

Zama - Zamak - Zamac - Zamak.

FINITURE - FINISHES - EXECUTIONS - AUSFUEHAUNGEN

Verniciatura epossidica tutti i colori. Ottonato - Cromato.
Epoxy painting every colour. Brassed - Chromed.
Peinture Epoxide chaque couleur. Laitonné - Chrome.
Epoxy Lackierung jeder Farbe. Vermessingt - Verchromt.

798

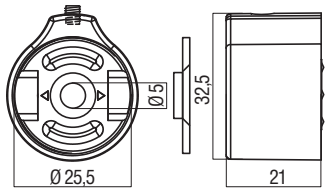

Ghiera smontabile per tubo Ø 25mm (con vite)
Detachable flange - roud tube Ø 25mm tube (with screw)
Pallier de baton rond Ø 25mm, detachable (avec vis)
Abnehmbare Befestigungsmutter für Rohr Ø 25mm (mit Schraube)

MATERIALE - MATERIAL - MATIÉRE - MATERIAL

zama - zamak - zamac - Zamak

FINITURE - FINISHES - EXECUTIONS - AUSFUEHAUNGEN

cromato - ottonato. chromed - brass plated.
chromé - laitonné. Verchromt - vermessingt.

799

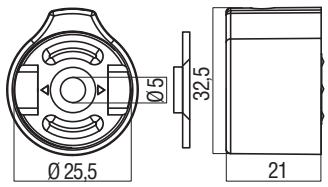

Ghiera smontabile per tubo Ø 25mm (senza vite)
Detachable flange - roud tube Ø 25mm tube (without screw)
Pallier de baton rond Ø 25mm, detachable (sans vis)
Abnehmbare Befestigungsmutter für Rohr Ø 25mm (ohne Schraube)

MATERIALE - MATERIAL - MATIÉRE - MATERIAL

zama - zamak - zamak - Zamak

FINITURE - FINISHES - EXECUTIONS - AUSFUEHAUNGEN

cromato - ottonato. chromed - brass plated.
chromé - laitonné. Verchromt - vermessingt.

800

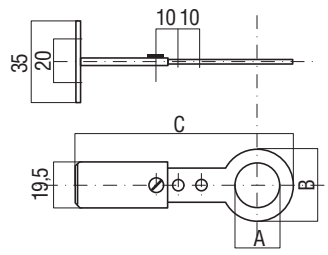

Reggitubo allungabile.
Extendable rod support.
Support tube extensible.
Verlängerbarer Rohrhalter.

Amm	Bmm	Cmm
20,5	29	68÷88
26,5	36	76÷105

MATERIALE - MATERIAL - MATIÉRE - MATERIAL

acciaio - steel - acier - Stahl.

FINITURE - FINISHES - EXECUTIONS - AUSFUEHAUNGEN

zincato - tropicalizzato. galvanized - tropicalised.
zingué - tropicalisé. verzinkt - tropenfest.

801

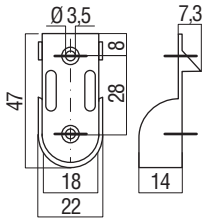

Reggitubo laterale.
Lateral rod support.
Support tube latéral.
Seitlicher Rohrhalter.

MATERIALE - MATERIAL - MATIÉRE - MATERIAL

acciaio - steel - acier - Stahl.

FINITURE - FINISHES - EXECUTIONS - AUSFUEHAUNGEN

zincato - tropicalizzato. galvanized - tropicalised.
zingué - tropicalisé. verzinkt - tropenfest.

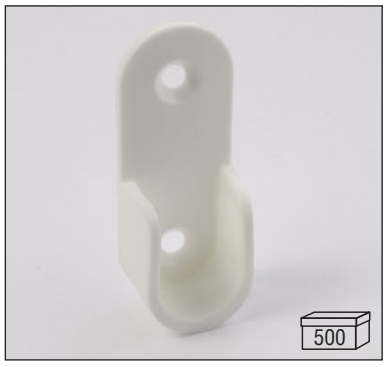

802

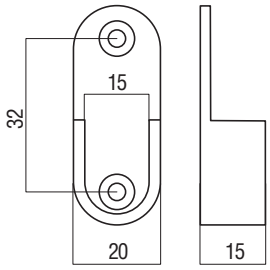

Reggitubo per ovale 30x15mm.
Plastic support for oval 30x15mm.
Support pour tube ovale penderie 30x15mm.
Rohrhalter oval 30x15mm.

MATERIALE - MATERIAL - MATIÉRE - MATERIAL

nylon.

FINITURE - FINISHES - EXECUTIONS - AUSFUEHAUNGEN

bianco - noce. white - brown.
blanc - marron. weiß - braun.

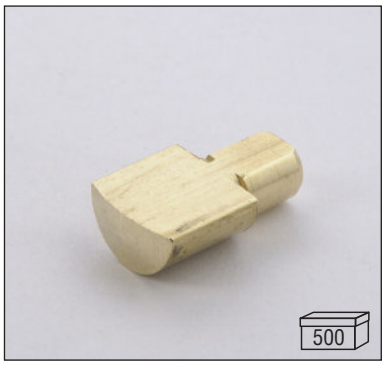

803

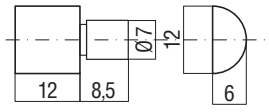

Mensolina 1/2 tondo tornita.
Round spoon-type turned shelf holder.
Etagère 1/2 ronde usinée.
Kleines Bord 1/2 angerundet.

MATERIALE - MATERIAL - MATIÉRE - MATERIAL

ottone - brass - laiton - Messing.

FINITURE - FINISHES - EXECUTIONS - AUSFUEHAUNGEN

lucido - nichelato - bronzato. polished - nickeled - bronzed.
brillant - nickelé - bronze. glänzend - vernickelt - bronziert.

804

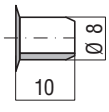

Bussolina con bordo per art. 803.
Sleeve with stop for item 803.
Douille avec bordure pour art. 803.
Kleine Buchse mit Rand für Art. 803.

MATERIALE - MATERIAL - MATIÉRE - MATERIAL

acciaio - steel - acier - Stahl.

FINITURE - FINISHES - EXECUTIONS - AUSFUEHAUNGEN

ottonato - nichelato - bronzato.
brass plated - nickeled - bronzed.
laitonné - nickelé - bronze.
vermessingt - vernickelt - bronziert.

805

Amm	**Ø5**	**Ø7**
Bmm	16	23
Cmm	8	7

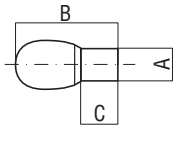

Mensolina.
Shelf rest.
Taquet.
Kleines Bord.

MATERIALE - MATERIAL - MATIÉRE - MATERIAL

acciaio - steel - acier - Stahl.

FINITURE - FINISHES - EXECUTIONS - AUSFUEHAUNGEN

ottonato - nichelato - bronzato.
brass plated - nickeled - bronzed.
laitonné - nickelé - bronze.
vermessingt - vernickelt - bronziert.

806

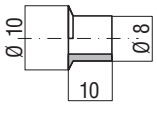

Bussolina per art. 805 da Ø 7mm.
Sleeve for item 805 Ø 7mm.
Douille pour art. 805 Ø 7mm.
Kleine Buchse für Art. 805 mit Ø 7mm.

MATERIALE - MATERIAL - MATIÉRE - MATERIAL

acciaio - steel - acier - Sthal.

FINITURE - FINISHES - EXECUTIONS - AUSFUEHAUNGEN

ottonato - nichelato. brass plated - nickeled.
laitonné - nickelé. Verchromt - vernickelt.

807

A	**Ø12x10 mm**
A	**Ø12x12 mm**

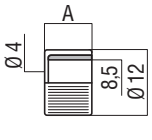

Reggicristallo ricoperto in gomma.
Rubber covered glass holder.
Support de verre recouvert de caoutchouc.
Glashalter, mit Gummi verkleidet.

MATERIALE - MATERIAL - MATIÉRE - MATERIAL

ottone - brass - laiton - Messing.

FINITURE - FINISHES - EXECUTIONS - AUSFUEHAUNGEN

bianco - marrone - nero. white - brown - black.
blanc - marron - noir. Weiß - Braun - Schwarz.

808

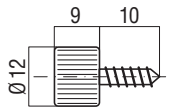

Reggicristallo con vite fissa, ricoperto in gomma.
Glass holder with fixed screw, rubber covered.
Support de verre avec vis fixe, recouvert de caoutchouc.
Glashalter mit fester Schraube, verkleidet mit Gummi.

MATERIALE - MATERIAL - MATIÉRE - MATERIAL

ottone - brass - laiton - Messing.

FINITURE - FINISHES - EXECUTIONS - AUSFUEHAUNGEN

bianco - marrone - nero. white - brown - black.
blanc - marron - noir. Weiß - Braun - Schwarz.

809

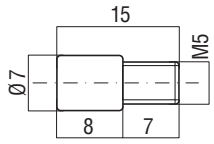

Mensolina con perno filettato 5MA.
Shelf holder with threaded pin 5MA.
Etagère avec goujon fileté 5MA.
Kleines Bord mit Zapfen 5MA mit Gewinde.

MATERIALE - MATERIAL - MATIÉRE - MATERIAL

ottone - brass - laiton - Messing.

FINITURE - FINISHES - EXECUTIONS - AUSFUEHAUNGEN

lucido - nichelato - bronzato. polished - nickeled - bronzed.
brillant - nickelé - bronze. glänzend - vernickelt - bronziert.

810

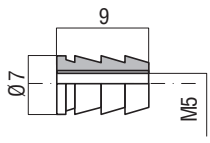

Bussolina per art. 809 - 5MA.
Sleeve for item 809 - 5MA.
Douille pour art. 809 - 5MA.
Kleine Buchse für Art. 809 - 5MA.

MATERIALE - MATERIAL - MATIÉRE - MATERIAL

ottone - brass - laiton - Messing.

FINITURE - FINISHES - EXECUTIONS - AUSFUEHAUNGEN

lucido - nichelato - bronzato. polished - nickeled - bronzed.
brillant - nickelé - bronze. glänzend - vernickelt - bronziert.

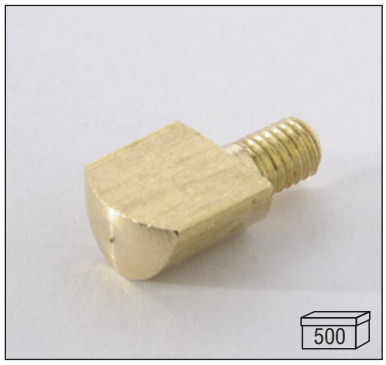

811

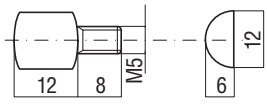

Mensolina mezzotondo con perno filettato 5MA.
Spoon-type shelf holder with threaded pin 5MA.
Etagère mi-ronde avec goujon fileté 5MA.
Kleines halbrundes Bord mit Zapfen 5MA mit Gewinde.

MATERIALE - MATERIAL - MATIÉRE - MATERIAL

ottone - brass - laiton - Messing.

FINITURE - FINISHES - EXECUTIONS - AUSFUEHAUNGEN

lucido - nichelato - bronzato. polished - nickeled - bronzed.
brillant - nickelé - bronze. glänzend - vernickelt - bronziert.

812

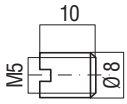

Bussolina per art. 811 - 5MA.
Sleeve for item 811 - 5MA.
Douille pour art. 811- 5MA.
Kleine Buchse für Art. 811 - 5MA.

MATERIALE - MATERIAL - MATIÉRE - MATERIAL

ottone - brass - laiton - Messing.

FINITURE - FINISHES - EXECUTIONS - AUSFUEHAUNGEN

lucido - nichelato - bronzato. polished - nickeled - bronzed.
brillant - nickelé - bronze. glänzend - vernickelt - bronziert.

813

perno A mm	Ø5	Ø6

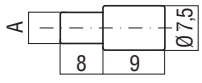

Mensolina.
Shelf rest.
Taquet.
Kleines Plastikbord.

MATERIALE - MATERIAL - MATIÉRE - MATERIAL

plastica - plastic - plastique - Plastik.

FINITURE - FINISHES - EXECUTIONS - AUSFUEHAUNGEN

bianco - marrone - nero. white - brown - black.
blanc - marron - noir. Weiß - Braun - Schwarz.

814

perno A mm	Ø4	Ø5

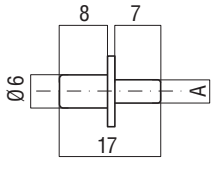

Mensola cilindrica con anello.
Cylindrical shelf holder in plastic with ring.
Etagère cylindrique en plastique avec anneau.
Zylinderförmiges Bord aus Plastik mit Ring.

MATERIALE - MATERIAL - MATIÉRE - MATERIAL

plastica - plastic - plastique - Plastik.

FINITURE - FINISHES - EXECUTIONS - AUSFUEHAUNGEN

bianco - marrone - neutro. white - brown - neutral.
blanc - marron - neutre. Weiß - Braun - neutral.

815

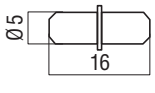

Reggipiani Ø 5 mm con rondella.
Shelf holder with washer Ø 5 mm.
Taquet d'étagère Ø 5 mm avec rondelle.
Bretthalter Ø 5 mm mit Scheibe.

MATERIALE - MATERIAL - MATIÉRE - MATERIAL

acciaio - steel - acier - Stahl.

FINITURE - FINISHES - EXECUTIONS - AUSFUEHAUNGEN

zincato - galvanized - zingué - verzinkt.

816

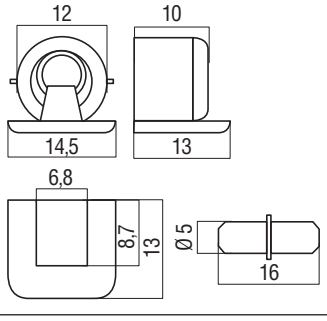

Reggipiano a click con perno zincato, Ø 5mm.
Click shelf support with pin in zincked steel, Ø 5mm.
Taquet en plastique avec goupille en acier zingué, Ø 5mm.
Bretthalter mit Klick-System und Zapfen aus verzinktem Stahl.

MATERIALE - MATERIAL - MATIÉRE - MATERIAL

acciaio+plastica - steel+plastic - acier+plastique - Stahl+Plastik.

FINITURE - FINISHES - EXECUTIONS - AUSFUEHAUNGEN

bianco - marrone - nero - grigio alluminio.
white - brown - black - gray aluminium.
blanc - marron - noir - gris aluminium.
Weiß - Braun - aluminiumgrau.

817

non assemblato
not assembled
démonté
zerlegt

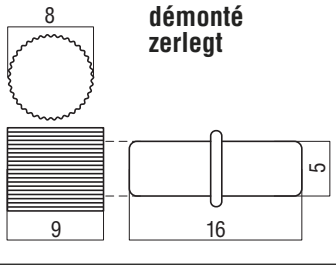

Reggipiano "chiuso" Ø 8 mm con perno zincato Ø 5 mm.
"Closed" shelf holder Ø 8 mm with Ø 5 mm pin in galvanised steel.
Taquet d'étagère "fermé" Ø 8 mm avec goujon Ø 5 mm en acier zingué.
"Geschlossene" Bretthalter Ø 8 mm mit Zapfen Ø 5 mm in verzinktem Stahl.

MATERIALE - MATERIAL - MATIÉRE - MATERIAL

acciaio+plastica - steel+plastic - acier+plastique - Stahl+Plastik.

FINITURE - FINISHES - EXECUTIONS - AUSFUEHAUNGEN

bianco - marrone - nero - trasparente.
white - brown - black - transparent.
blanc - marron - noir - transparent.
Weiß - Braun - Schwarz - transparent.

818

filetto A	5MA	6MA

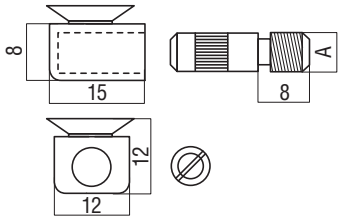

Sostegni a ventosa con perno zincato - filetto 5MA - 6MA.
Suction cup supports with galvanised threaded pin 5MA - 6MA.
Supports à ventouse avec goujon zingué - filet 5MA - 6MA.
Stützelemente mit Saugkopf und verzinktem Zapfen - Gewinde 5MA - 6MA.

MATERIALE - MATERIAL - MATIÉRE - MATERIAL

acciaio+plastica - steel+plastic - acier+plastique - Stahl+Plastik.

FINITURE - FINISHES - EXECUTIONS - AUSFUEHAUNGEN

bianco - marrone - nero - trasparente.
white - brown - black - transparent.
blanc - marron - noir - transparent.
Weiß - Braun - Schwarz - transparent.

819

A	Ø5mm	Ø6mm

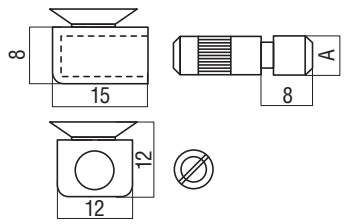

Sostegni a ventosa con perno senza filetto zincato.
Suction cup supports with galvanised unthreaded pin
Supports à ventouse avec goujon zingué sans filet.
Stützelemente mit Saugkopf und verzinktem Zapfen ohne Gewinde.

MATERIALE - MATERIAL - MATIÉRE - MATERIAL

acciaio+plastica - steel+plastic - acier+plastique - Stahl+Plastik.

FINITURE - FINISHES - EXECUTIONS - AUSFUEHAUNGEN

bianco - marrone - nero - trasparente.
white - brown - black - transparent.
blanc - marron - noir - transparent.
Weiß - Braun - Schwarz - transparent.

820

A=	M5	M6
B= mm	8	9,5
C= mm	10	15

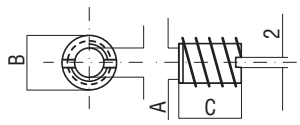

Bussola con taglio cacciavite.
Bushing with screwdriver slot.
Douille avec coupe tournevis.
Buchse mit Schraubendreherschnitt.

MATERIALE - MATERIAL - MATIÉRE - MATERIAL

ottone - brass - laiton - Messing.

FINITURE - FINISHES - EXECUTIONS - AUSFUEHAUNGEN

lucido - polished - brillant - glänzend.

821

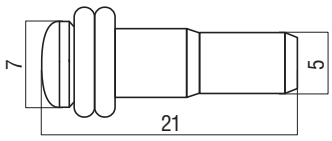

Reggicristallo in acciaio con O.R.
Glass holder in steel with O.R.
Support de verre en acier avec O.R.
Glashalter aus Stahl mit O.R.

MATERIALE - MATERIAL - MATIÉRE - MATERIAL

acciaio - steel - acier - Stahl.

FINITURE - FINISHES - EXECUTIONS - AUSFUEHAUNGEN

zincato - galvanized - zingué - verzinkt.

822

A=mm	16	20	25
Ø 7mm			

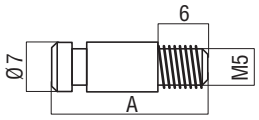

Mensolina con O.R.
Shelf holder with O.R.
Etagère avec O.R.
Kleines Bord mit O.R.

MATERIALE - MATERIAL - MATIÉRE - MATERIAL

acciaio - steel - acier - Stahl.

FINITURE - FINISHES - EXECUTIONS - AUSFUEHAUNGEN

ottonato - nichelato - bronzato.
brass plated - nickeled - bronzed.
laitonné - nickelé - bronze.
vermessingt - vernickelt - bronziert.

823

mm	Ø 7	A=20
mm	Ø 7	A=25

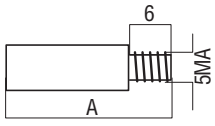

Mensolina tonda Ø 7mm x 5MA.
Round shelf Ø 7mm x 5MA.
Ronde plateau Ø 7mm x 5MA.
Bodenträger Ø 7mm x 5MA.

MATERIALE - MATERIAL - MATIÉRE - MATERIAL

acciaio - steel - acier - Stahl.

FINITURE - FINISHES - EXECUTIONS - AUSFUEHAUNGEN

ottonato - nichelato - bronzato.
brass plated - nickeled - bronzed.
laitonné - nickelé - bronze.
vermessingt - vernickelt - bronziert.

824

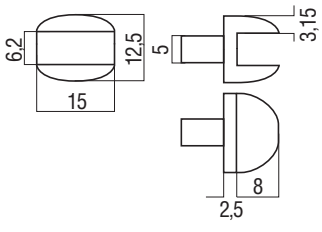

Reggicristallo antiribaltamento.
Transparent shell support whit stop for glass.
Support avec stop a glace en plastique neutre.
Antikipp-Glashalter

MATERIALE - MATERIAL - MATIÉRE - MATERIAL

plastica - plastic - plastique - Plastik.

FINITURE - FINISHES - EXECUTIONS - AUSFUEHAUNGEN

trasparente - transparent - transparent - transparent.

825

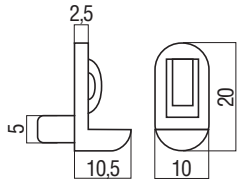

Reggicristallo a poltroncina a scatto 5mm - per ripiani 4/6 mm.
Transparent click shelf support 5mm - for glass thickness 4/6 mm.
Support 5 mm avec click a glace - epaisseur 4/6 mm.
Glashalter mit Schnappsystem 5mm - für Einlegeböden 4/6 mm.

MATERIALE - MATERIAL - MATIÉRE - MATERIAL

plastica - plastic - plastique - Plastik.

FINITURE - FINISHES - EXECUTIONS - AUSFUEHAUNGEN

trasparente - transparent - transparent - transparent.

826

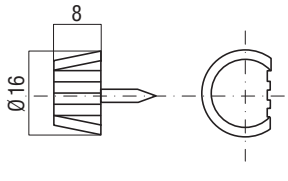

Reggipiano con chiodo.
Shelf support with rivet.
Taquet avec clou.
Bretthalter mit Nagel.

MATERIALE - MATERIAL - MATIÉRE - MATERIAL

plastica - plastic - plastique - Plastik.

FINITURE - FINISHES - EXECUTIONS - AUSFUEHAUNGEN

bianco - marrone - nero. white - brown - black.
blanc - marron - noir. Weiß - Braun - Schwarz.

827

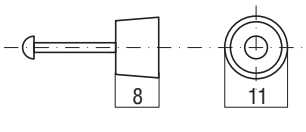

Reggipiano tondo con chiodo sfilabile.
Round shelf support with loose nail.
Taquet round clou a lever.
Runde Plastikbretthalter mit ausziehbarem Nagel.

MATERIALE - MATERIAL - MATIÉRE - MATERIAL

plastica - plastic - plastique - Plastik.

FINITURE - FINISHES - EXECUTIONS - AUSFUEHAUNGEN

bianco - marrone - nero. white - brown - black.
blanc - marron - noir. Weiß - Braun - Schwarz.

828

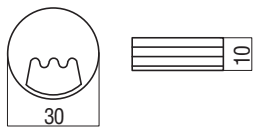

Attaccaglia dentata per specchi.
Cogged cabinet hook for mirror.
Patte dentée pour mirror.
Verzahnte Hängevorrichtung für Spiegel.

MATERIALE - MATERIAL - MATIÉRE - MATERIAL

plastica - plastic - plastique - Plastik.

FINITURE - FINISHES - EXECUTIONS - AUSFUEHAUNGEN

bianco - marrone - nero. white - brown - black.
blanc - marron - noir. Weiß - Braun - Schwarz.

829

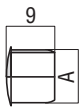

Tappo copriforo.
Cover.
Capuchon.
Stöpsel für Loch.

A=mm	5	6	8	10	12
Pz./Pcs.	2000	2000	2000	2000	1000

MATERIALE - MATERIAL - MATIÉRE - MATERIAL

plastica - plastic - plastique - Plastik.

FINITURE - FINISHES - EXECUTIONS - AUSFUEHAUNGEN

bianco - marrone - nero - grigio - avorio - faggio - ciliegio - rovere.
white - brown - black - grey - ivory - beech - cherry - oak.
blanc - marron - noir - gris - ivoire - hêtre - cerisier - chêne.
Weiß - Braun - Schwarz - Grau - Elfenbeinfarben - Buche - Kirsche - Eiche.

830

A perno/pin	Ø 5 mm	Ø 6 mm

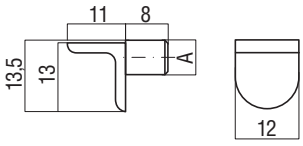

Mensolina a squadra.
Right angle shelf holder.
Etagère en équerre.
Kleines Bord mit Winkel.

MATERIALE - MATERIAL - MATIÉRE - MATERIAL

plastica - plastic - plastique - Plastik.

FINITURE - FINISHES - EXECUTIONS - AUSFUEHAUNGEN

bianco - marrone - nero - neutro.
white - brown - black - neutral.
blanc - marron - noir - neutre.
Weiß - Braun - Schwarz - Neutral.

831

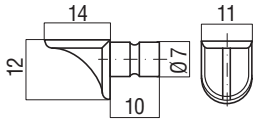

Mensolina.
Shelf holder.
Etagère.
Kleines Bord.

MATERIALE - MATERIAL - MATIÉRE - MATERIAL

plastica - plastic - plastique - Plastik.

FINITURE - FINISHES - EXECUTIONS - AUSFUEHAUNGEN

bianco - marrone white - brown.
blanc - marron Weiß - Braun.

832

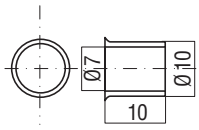

Bussolina per art. 831.
Sleeve for item 831.
Douille pour art. 831.
Kleine Buchse für Art. 831.

MATERIALE - MATERIAL - MATIÉRE - MATERIAL

plastica - plastic - plastique - Plastik.

FINITURE - FINISHES - EXECUTIONS - AUSFUEHAUNGEN

bianco - marrone. white - brown.
blanc - marron. Weiß - Braunl.

834

	Ø	Ø
A=mm	5	10

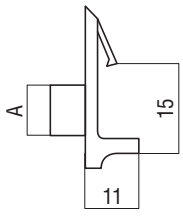

Portaripiano a scatto.
Shelf rest with slip hook.
Support console à clenche.
Einlegebodenstütze mit Schnappsystem.

MATERIALE - MATERIAL - MATIÉRE - MATERIAL

plastica - plastic - plastique - Plastik.

FINITURE - FINISHES - EXECUTIONS - AUSFUEHAUNGEN

bianco - marrone. white - brown.
blanc - marron. Weiß - Braunl.

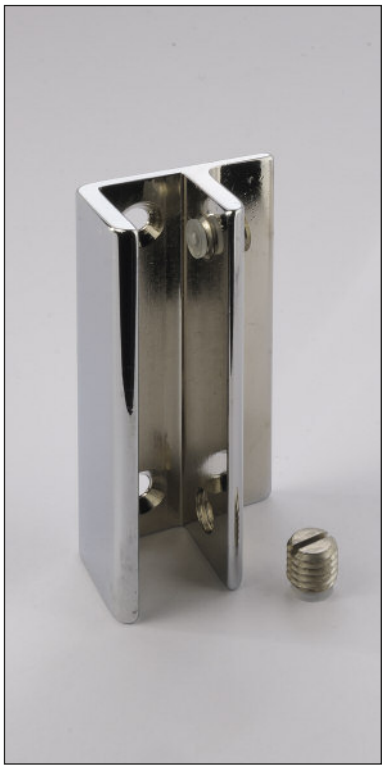

835

Amm	22	30	45	70
Bmm	8	10	12	
Pz./Pcs.	20	20	12	12

Reggicristallo per ripiani spessore 8 o 10 o 12mm.
Glass holder for shelves, thicknesses 8 or 10 or 12mm.
Support de verre pour étagères de 8 ou 10 ou 12mm d'épaisseur.
Glashalter für Einlegeböden der Stärke 8, 10 oder 12mm.

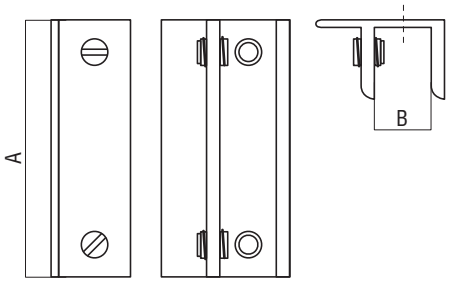

MATERIALE - MATERIAL - MATIÉRE - MATERIAL

ottone - brass - laiton - Messing.

FINITURE - FINISHES - EXECUTIONS - AUSFUEHAUNGEN

cromato - chromed - chromé - Verchromt

836

Amm	30	45	70
Bmm	8	10	

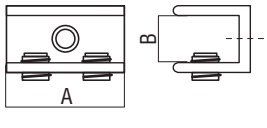

Reggicristallo per ripiani spessore 8 o 10 o 12mm.
Glass holder for shelves, thicknesses 8 or 10 or 12mm.
Support de verre pour étagères de 8 ou 10 ou 12mm d'épaisseur.
Glashalter für Einlegeböden der Stärke 8, 10 oder 12mm.

MATERIALE - MATERIAL - MATIÉRE - MATERIAL

ottone - brass - laiton - Messing.

FINITURE - FINISHES - EXECUTIONS - AUSFUEHAUNGEN

cromato - chromed - chromé - Verchromt

837

Bmm	6	8	10	12	15

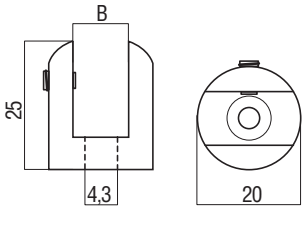

Reggicristallo per ripiani spessore 6 o 8 o 10 o 12 o 15mm.
Glass holder for shelves, thicknesses 6 or 8 or 10 or 12 or 15mm.
Support de verre pour étagères de 6 ou 8 ou 10 ou 12 ou 15mm d'épaisseur.
Glashalter für Einlegeböden der Stärke 6, 8, 10, 12 oder 15mm.

MATERIALE - MATERIAL - MATIÉRE - MATERIAL

ottone - brass - laiton - Messing.

FINITURE - FINISHES - EXECUTIONS - AUSFUEHAUNGEN

cromato - chromed - chromé - Verchromt

838

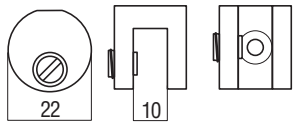

Reggicristallo per ripiani spessore 10mm.
Glass holder for shelves, thicknesses 10mm.
Support de verre pour étagères de 10mm d'épaisseur.
Glashalter für Einlegeböden der Stärke 10mm.

MATERIALE - MATERIAL - MATIÉRE - MATERIAL
ottone - brass - laiton - Messing.

FINITURE - FINISHES - EXECUTIONS - AUSFUEHAUNGEN
cromato - chromed - chromé - Verchromt

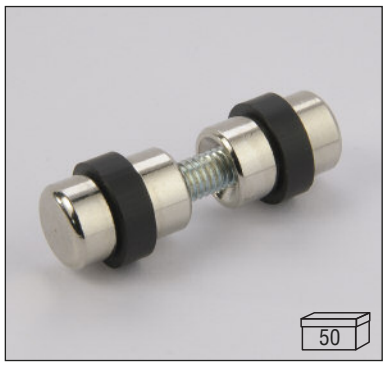

839

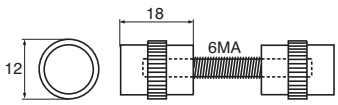

Reggipiano doppio.
Double shelf holder.
Taquet d'étagère double.
Doppelter Bretthalter.

MATERIALE - MATERIAL - MATIÉRE - MATERIAL
ottone - brass - laiton - Messing.

FINITURE - FINISHES - EXECUTIONS - AUSFUEHAUNGEN
nichelato - nickeled - nickelé - vernickelt.

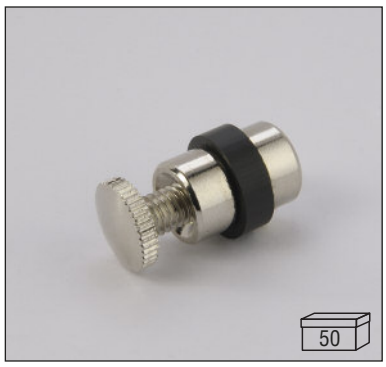

840

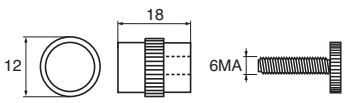

Reggipiano con vite di fissaggio 6MA.
Shelf holder with fixing screws 6MA.
Taquet d'étagère avec vis de fixation 6MA.
Bretthalter mit Befestigungsschraube 6MA.

MATERIALE - MATERIAL - MATIÉRE - MATERIAL
ottone - brass - laiton - Messing.

FINITURE - FINISHES - EXECUTIONS - AUSFUEHAUNGEN
nichelato - nickeled - nickelé - vernickelt.

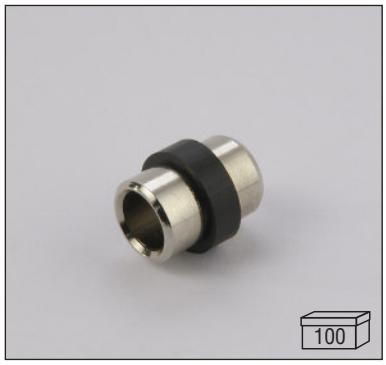

841

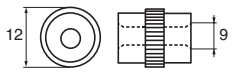

Reggipiano forato per fissaggio con vite.
Pierced shelf holder for fastening with screws.
Taquet d'étagère percé pour fixation avec vis.
Bretthalter gelocht für die Befestigung mit Schrauben.

MATERIALE - MATERIAL - MATIÉRE - MATERIAL
ottone - brass - laiton - Messing.

FINITURE - FINISHES - EXECUTIONS - AUSFUEHAUNGEN
nichelato - nickeled - nickelé - vernickelt.

842

Amm	Ø16	Ø18	Ø20

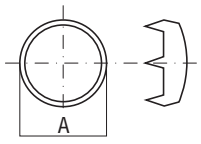

Copridado.
Cover.
Cage ecrou.
Schraubenmutterabdeckung.

MATERIALE - MATERIAL - MATIÉRE - MATERIAL

acciaio - steel - acier - Stahl.

FINITURE - FINISHES - EXECUTIONS - AUSFUEHAUNGEN

zincato - bronzato - tropicalizzato.
galvanized - bronzed- tropicalised.
zingué - bronze - tropicalisé.
verzinkt - bronziert - tropenfest.

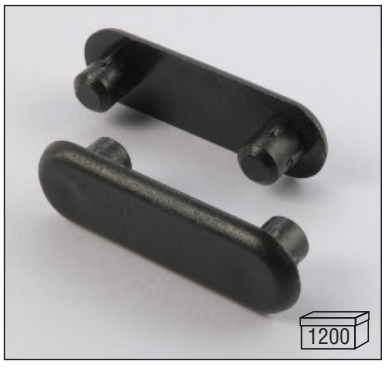

843

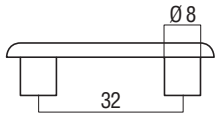

Pattini per mobili.
Socket for furniture.
Patin pour meubles.
Kufen für Möbel.

MATERIALE - MATERIAL - MATIÉRE - MATERIAL

plastica - plastic - plastique - Plastik.

FINITURE - FINISHES - EXECUTIONS - AUSFUEHAUNGEN

bianco - marrone - nero - neutro.
white - brown - black - neutral.
blanc - marron - noir - neutre.
Weiß - Braun - Schwarz - Neutral.

844

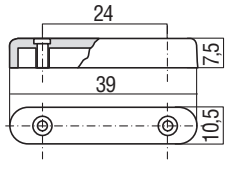

Fermaportina con 2 fori.
Stop with 2 holes.
Butée avec 2 trous.
Türstopper mit 2 Löchern.

MATERIALE - MATERIAL - MATIÉRE - MATERIAL

plastica - plastic - plastique - Plastik.

FINITURE - FINISHES - EXECUTIONS - AUSFUEHAUNGEN

bianco - marrone - nero. white - brown - black.
blanc - marron - noir. Weiß - Braun - Schwarz.

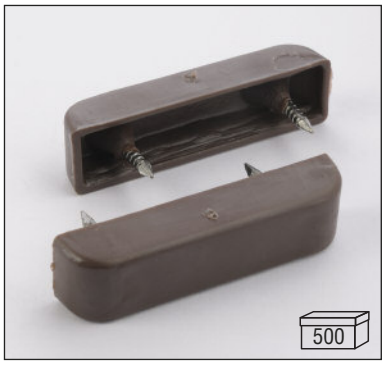

845

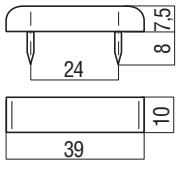

Fermaportina a 2 punte.
Stop with 2 nails.
Butée avec 2 clous.
Türstopper mit 2 Spitzen

MATERIALE - MATERIAL - MATIÉRE - MATERIAL

plastica - plastic - plastique - Plastik.

FINITURE - FINISHES - EXECUTIONS - AUSFUEHAUNGEN

bianco - marrone - nero. white - brown - black.
blanc - marron - noir. Weiß - Braun - Schwarz.

846

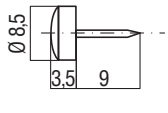

Paracolpi con chiodo.
Antishock cap with nail.
Armortisseur avec clou.
Federpuffer mit Nagel.

MATERIALE - MATERIAL - MATIÉRE - MATERIAL

plastica - plastic - plastique - Plastik.

FINITURE - FINISHES - EXECUTIONS - AUSFUEHAUNGEN

bianco - marrone - nero. white - brown - black.
blanc - marron - noir. Weiß - Braun - Schwarz.

847

D	7	10	10
H	1,5	1,5	3
Pz./Pcs.	5000	5000	5000

Pz./Pcs. 50

Paracolpi adesivi.
Antishock cap, adhesive.
Armotisseur adhesif.
Selbstklebende Federpuffer.

MATERIALE - MATERIAL - MATIÉRE - MATERIAL

plastica - plastic - plastique - Plastik.

FINITURE - FINISHES - EXECUTIONS - AUSFUEHAUNGEN

trasparente - transparent - transparent - transparent.

848

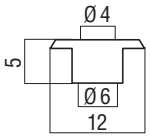

Orli sottoviti con bordo per cristalli.
Screw washers with glass protection border.
Cache-vis avec bord pour verre.
Unterlegscheiben mit Rand für Glas.

MATERIALE - MATERIAL - MATIÉRE - MATERIAL

plastica - plastic - plastique - Plastik.

FINITURE - FINISHES - EXECUTIONS - AUSFUEHAUNGEN

nero - neutro. black - neutral.
noir - neutre. Schwarz - neutral.

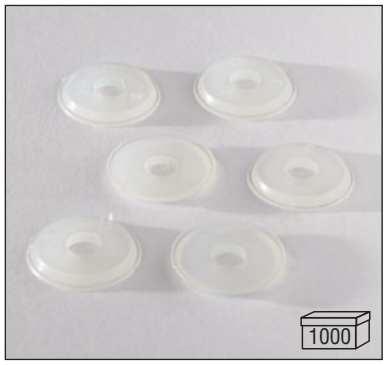

849

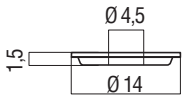

Orli sottoviti per cristallo.
Screw cup washers for glass.
Cache-vis pour verre.
Unterlegscheiben für Glas.

MATERIALE - MATERIAL - MATIÉRE - MATERIAL

plastica - plastic - plastique - Plastik.

FINITURE - FINISHES - EXECUTIONS - AUSFUEHAUNGEN

nero - neutro. black - neutral.
noir - neutre. Schwarz - neutral.

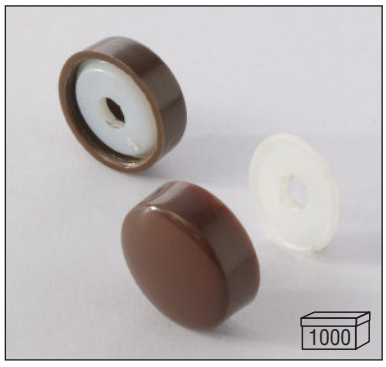

850

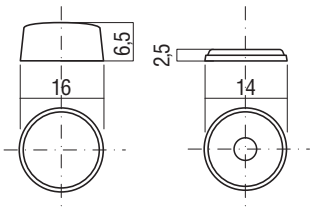

Copriviti.
Screw cover.
Cage de vis a glace.
Schraubenabdeckung.

MATERIALE - MATERIAL - MATIÉRE - MATERIAL

plastica - plastic - plastique - Plastik.

FINITURE - FINISHES - EXECUTIONS - AUSFUEHAUNGEN

bianco - marrone - nero. white - brown - black.
blanc - marron - noir. Weiß - Braun - Schwarz.

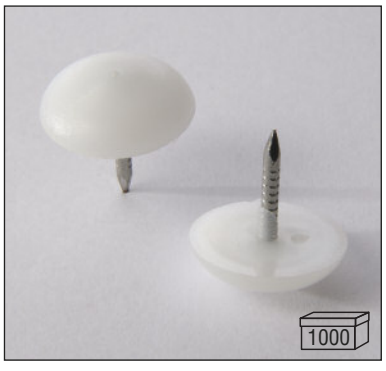

851

Sottosedia.
Legs socket.
Patin pour chaise.
Stuhluntersatz.

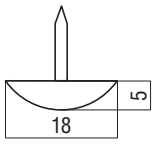

MATERIALE - MATERIAL - MATIÉRE - MATERIAL
plastica - plastic - plastique - Plastik.

FINITURE - FINISHES - EXECUTIONS - AUSFUEHAUNGEN
neutro - neutral - neutre - neutral.

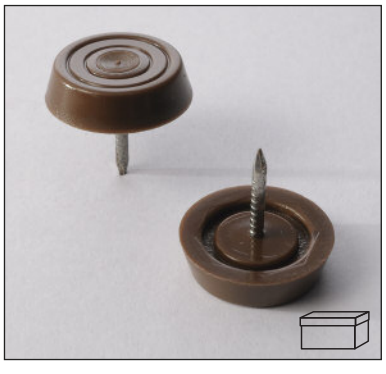

852

A	12	14	17	20	24
Pcs/Pz	1500	1500	1000	1000	500

Sottosedia con chiodo.
Legs socket with nail.
Patin pou chaise avec clou.
Stuhluntersatz mit Nagel.

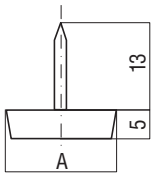

MATERIALE - MATERIAL - MATIÉRE - MATERIAL
plastica - plastic - plastique - Plastik.

FINITURE - FINISHES - EXECUTIONS - AUSFUEHAUNGEN
bianco - marrone - nero. white - brown - black.
blanc - marron - noir. Weiß - Braun - Schwarz.

853

A	15	18	20	23	26	30
Pcs/Pz	1000	500	500	250	250	150

Sottosedia con chiodo.
Legs socket with nail.
Patin pou chaise avec clou.
Stuhluntersatz mit Nagel.

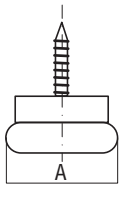

MATERIALE - MATERIAL - MATIÉRE - MATERIAL
acciaio+gomma - steel+rubber - acier+caoutchouc - Stahl+Gummi.

FINITURE - FINISHES - EXECUTIONS - AUSFUEHAUNGEN
nichelato/gomma nera. nickeled/black rubber.
nickelé/caoutchouc noir. vernickelt/Nylon+Gummi.

854

Amm	22	26	30

Sottosedia feltro alto.
Leg socket high felt.
Patin pour chaise avec couche en feutre haut.
Hoher Stuhluntersatz mit Filz.

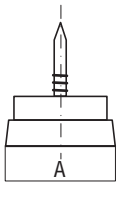

MATERIALE - MATERIAL - MATIÉRE - MATERIAL
plastica - plastic - plastique - Plastik.

FINITURE - FINISHES - EXECUTIONS - AUSFUEHAUNGEN
bianco - marrone. white - brown.
blanc - marron. Weiß - Braun.

855

Amm	15	19
Pcs/Pz	1000	500

Piedino sotto sedia pratic alto.
Tall pratic chair glide.
Pied sous chaise pratic haut.
Fuß Stuhluntersatz pratic hoch.

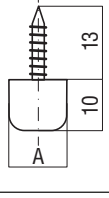

MATERIALE - MATERIAL - MATIÉRE - MATERIAL
plastica - plastic - plastique - Plastik.

FINITURE - FINISHES - EXECUTIONS - AUSFUEHAUNGEN
nero - black - noir - Schwarz.

856

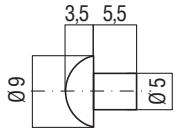

Paracolpi bombato.
Rounded bumper.
Butée bombée.
Gewölbter Federpuffer.

MATERIALE - MATERIAL - MATIÉRE - MATERIAL

plastica - plastic - plastique - Plastik.

FINITURE - FINISHES - EXECUTIONS - AUSFUEHAUNGEN

bianco - marrone. white - brown.
blanc - marron. Weiß - Braun.

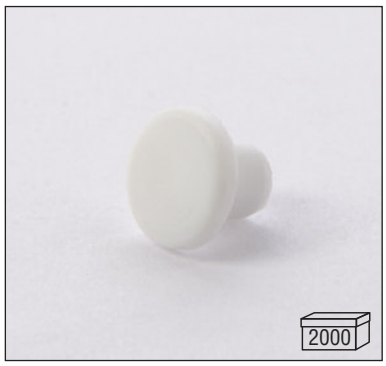

857

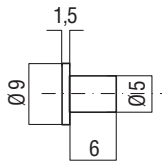

Paracolpi piano.
Bumper flat.
Butée plat.
Federpuffer flach.

MATERIALE - MATERIAL - MATIÉRE - MATERIAL

plastica - plastic - plastique - Plastik.

FINITURE - FINISHES - EXECUTIONS - AUSFUEHAUNGEN

bianco - marrone. white - brown.
blanc - marron. Weiß - Braun.

858

A mm	20	23	30
Pcs/Pz	500	250	150

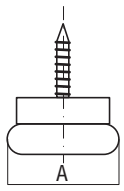

Sottosedia con chiodo.
Legs socket with nail.
Patin pou chaise avec clou.
Stuhluntersatz mit Nagel.

MATERIALE - MATERIAL - MATIÉRE - MATERIAL

nylon+gomma. nylon+rubber.
nylon + caoutchouc. Nylon+Gummi.

FINITURE - FINISHES - EXECUTIONS - AUSFUEHAUNGEN

bianco - marrone - nero. white - brown - black.
blanc - marron - noir. Weiß - Braun - Schwarz.

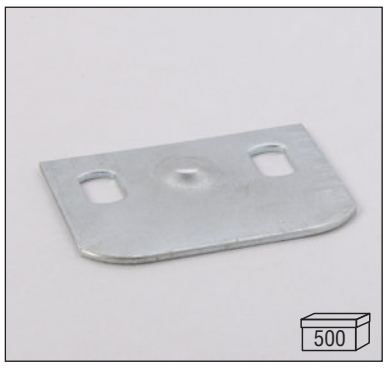

859

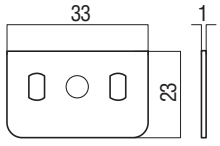

Fermantina piana.
Flat doorstop.
Butoir plat.
Flache Befestigungsplatte.

MATERIALE - MATERIAL - MATIÉRE - MATERIAL

acciaio - steel - acier - Stahl.

FINITURE - FINISHES - EXECUTIONS - AUSFUEHAUNGEN

zincato - tropicalizzato. galvanized - tropicalised.
zingué - tropicalisé. verzinkt - tropenfest.

860

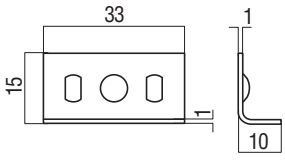

Squadretta fermaportine.
Right angle doorstop.
Butoir en équerre.
Anschlusswinkel Feststeller.

MATERIALE - MATERIAL - MATIÉRE - MATERIAL

acciaio - steel - acier - Stahl.

FINITURE - FINISHES - EXECUTIONS - AUSFUEHAUNGEN

zincato - tropicalizzato. galvanized - tropicalised.
zingué - tropicalisé. verzinkt - tropenfest.

861

Fermaschienale a 4 punte.
Plate 4 points.
Arriere crampon.
Feststeller Rückenteil mit 4 Spitzen.

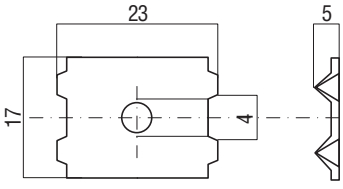

MATERIALE - MATERIAL - MATIÉRE - MATERIAL

acciaio - steel - acier - Stahl.

FINITURE - FINISHES - EXECUTIONS - AUSFUEHAUNGEN

zincato - tropicalizzato. galvanized - tropicalised.
zingué - tropicalisé. verzinkt - tropenfest.

862

Fermaportina a 2 punte.
2-pointed doorstop.
Butoir à 2 pointes.
Türstopper mit 2 Spitzen.

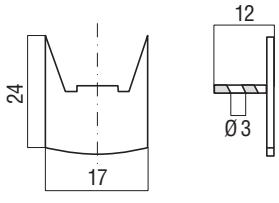

MATERIALE - MATERIAL - MATIÉRE - MATERIAL

acciaio - steel - acier - Stahl.

FINITURE - FINISHES - EXECUTIONS - AUSFUEHAUNGEN

zincato - tropicalizzato. galvanized - tropicalised.
zingué - tropicalisé. verzinkt - tropenfest.

863

Amm	Bmm	Cmm	Dmm	Pz/Pcs
8	21	12	8	600
10	22	13	10	400

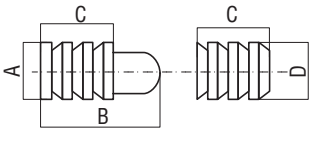

Spina + bussola di riferimento per tavoli.
Pin + sleeve for tables.
Tourillon + douille pour table.
Spitze + Buchse für Tisch.

MATERIALE - MATERIAL - MATIÉRE - MATERIAL

spina: ferro - bussola: ottone
plug: iron - bushing: brass
goupille : fer - douille: laiton
Spitze: Eisen - Buchse: Messing Spitze: tropenfest.

FINITURE - FINISHES - EXECUTIONS - AUSFUEHAUNGEN

spina: tropicalizzata. plug: tropicalised.
goupille: tropicalisée. Spitze: tropenfest.

864

Fermaspecchio con feltro.
Mirror holder with felt.
Butée pour miroir avec feutre.
Spiegelfeststeller mit Filz.

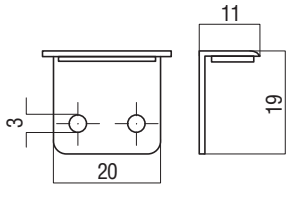

MATERIALE - MATERIAL - MATIÉRE - MATERIAL

acciaio - steel - acier - Stahl.

FINITURE - FINISHES - EXECUTIONS - AUSFUEHAUNGEN

nichelato - nickeled - nickelé - vernickelt.

865

Fermaspecchio con feltro.
Mirror holder with felt.
Butée pour miroir avec feutre.
Spiegelfeststeller mit Filz.

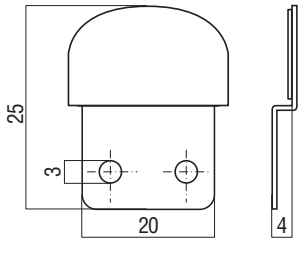

MATERIALE - MATERIAL - MATIÉRE - MATERIAL

acciaio - steel - acier - Stahl.

FINITURE - FINISHES - EXECUTIONS - AUSFUEHAUNGEN

nichelato - nickeled - nickelé - vernickelt.

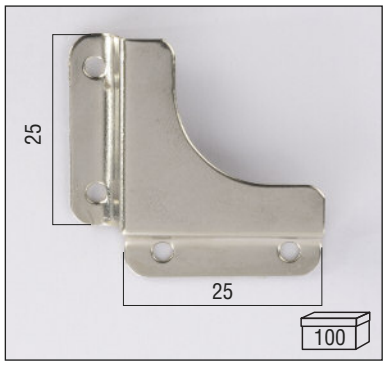

866

Fermaspecchio per vetro spessore 4mm.
Mirror holder for glass 4mm thick.
Butée pour miroir en verre de 4mm d'épaisseur.
Spiegelfeststeller für Glas Stärke 4mm.

MATERIALE - MATERIAL - MATIÉRE - MATERIAL

acciaio - steel - acier - Stahl.

FINITURE - FINISHES - EXECUTIONS - AUSFUEHAUNGEN

ottonato - nichelato. brass plated - nickeled.
laitonné - nickelé. vermessingt - vernickelt.

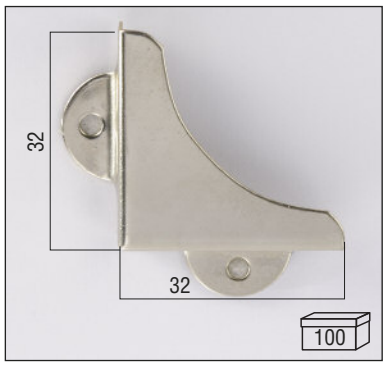

867

Fermaspecchio.
Mirror holder.
Butée pour miroir.
Spiegelfeststeller.

MATERIALE - MATERIAL - MATIÉRE - MATERIAL

acciaio - steel - acier - Stahl.

FINITURE - FINISHES - EXECUTIONS - AUSFUEHAUNGEN

ottonato - nichelato. brass plated - nickeled.
laitonné - nickelé. vermessingt - vernickelt.

868

Amm	Bmm	C	Dmm	Pz.Pcs.
12	25	10MA	12mm	200
15	30	12MA	12mm	120

Fondello.
T-nut.
Ecrou.
Bodenplatte.

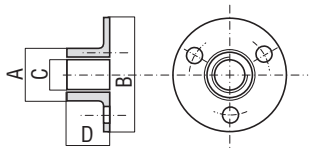

MATERIALE - MATERIAL - MATIÉRE - MATERIAL
ottone - brass - laiton - Messing.

FINITURE - FINISHES - EXECUTIONS - AUSFUEHAUNGEN
lucido - polished - brillant - glänzend.

869

Amm	Bmm	C	Dmm	Pz.Pcs.
10,3	25	8MA	10mm	1000
12	29	10MA	12mm	500

Fondello.
T-nut.
Ecrou.
Bodenplatte.

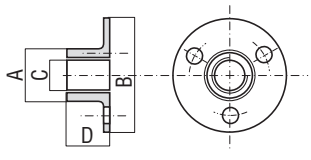

MATERIALE - MATERIAL - MATIÉRE - MATERIAL
acciaio - steel - acier - Stahl.

FINITURE - FINISHES - EXECUTIONS - AUSFUEHAUNGEN
zincato - tropicalizzato. galvanized - tropicalised.
zingué - tropicalisé. verzinkt - tropenfest.

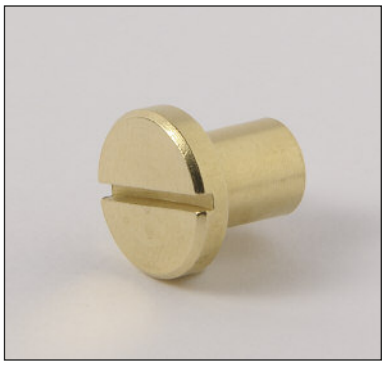

870

Amm	Bmm	Cmm	Dmm	Emm	Pz/Pcs
6MA	8	9	11	12	600
8MA	10	10	12	14	400

Borchia a testa piana.
Joint connector.
Capuchon tête plate.
Polsternagel mit Flachkopf.

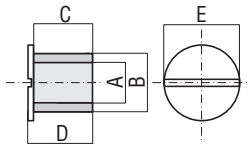

MATERIALE - MATERIAL - MATIÉRE - MATERIAL
ottone - brass - laiton - Messing.

FINITURE - FINISHES - EXECUTIONS - AUSFUEHAUNGEN
lucido - polished - brillant - glänzend.

871

A Ø	M4	M5	M6	M8	M10
B mm	17	18	19	22	25
C mm	7	8	9	12	12
Pz.Pcs.	1000	1000	1000	1000	500

Fondello a 4 punte.
T-Nut with 4 points.
Ecrou a griffe.
Bodenplatte mit 4 Spitzen.

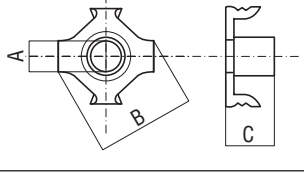

MATERIALE - MATERIAL - MATIÉRE - MATERIAL
acciaio - steel - acier - Stahl.

FINITURE - FINISHES - EXECUTIONS - AUSFUEHAUNGEN
zincato - tropicalizzato. galvanized - tropicalised.
zingué - tropicalisé. verzinkt - tropenfest.

872

A Ø	M4	M5	M6	M8	M10
B mm	17	18	19	22	25
C mm	7	8	9	12	12
Pz.Pcs.	1000	1000	1000	1000	500

Fondello a 4 punte.
T-Nut with 4 points.
Ecrou a griffe.
Bodenplatte mit 4 Spitzen.

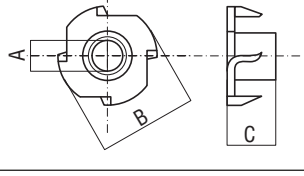

MATERIALE - MATERIAL - MATIÉRE - MATERIAL
acciaio - steel - acier - Stahl.

FINITURE - FINISHES - EXECUTIONS - AUSFUEHAUNGEN
zincato - galvanized - zingué - verzinkt.

873

Bussola M6.
Sleeve M6.
Douille M6.
Buchse M6.

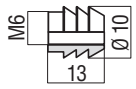

MATERIALE - MATERIAL - MATIÉRE - MATERIAL

ottone - brass - laiton - Messing.

FINITURE - FINISHES - EXECUTIONS - AUSFUEHAUNGEN

lucido - polished - brillant - glänzend.

874

A	M6	M6	M6	M6	M6
B mm	10	10	10	10	10
C mm	10	13	15	17	20
E mm	6	6	6	6	6

A	M8	M8	M8	M8	M10
B mm	12	12	12	12	15
C mm	15	20	22	24	18
E mm	8	8	8	8	10

Bussola con esagono.
Insert nut with hexagone.
Duille avec hexagone.
Sechskantbuchse.

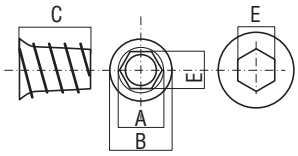

MATERIALE - MATERIAL - MATIÉRE - MATERIAL

zama - zamak - zamak - Zamak.

FINITURE - FINISHES - EXECUTIONS - AUSFUEHAUNGEN

grezzo - unfinished - brut - roh.

875

A=	M4	M5	M6	M8	M10
B= mm	8	10	10	12	15
C= mm	12	12	14	14	17
Pz/Pcs	700	600	600	400	200

Bussola con taglio cacciavite.
Nut screwdriver cut.
Duille fente tournevis.
Buchse mit Schraubendreherschnitt.

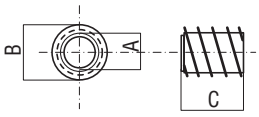

MATERIALE - MATERIAL - MATIÉRE - MATERIAL

ottone - brass - laiton - Messing.

FINITURE - FINISHES - EXECUTIONS - AUSFUEHAUNGEN

lucido - polished - brillant - glänzend.

876

A	M6	M8	M10
B	10	12	15
C	15	15	16,5

Bussola doppio imbocco.
Two sided bushing.
Douille double entrée.
Buchse doppelter Anschnitt.

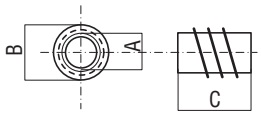

MATERIALE - MATERIAL - MATIÉRE - MATERIAL

zama - zamak - zamak - Zamak.

FINITURE - FINISHES - EXECUTIONS - AUSFUEHAUNGEN

grezzo - unfinished - brut - roh.

877

AØ	Bmm	Cmm	Pz.Pcs.
M6	8	28	300
M8	10	30	200

Spinotto con ribasso - (M6) (M8).
Countersunk plug - (M6) (M8).
Cheville avec baisse - (M6) (M8).
Verbindungsstift mit Senkung - (M6) (M8).

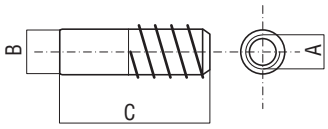

MATERIALE - MATERIAL - MATIÉRE - MATERIAL

acciaio - ottone
acier - laiton

steel - brass
Stahl - Messing.

FINITURE - FINISHES - EXECUTIONS - AUSFUEHAUNGEN

tropicalizzato - tropicalised - tropicalisé - tropenfest.

878

Amm	30	40	50	60
Bmm	6MA	8MA		
Cmm	12	16		
Dmm	6MA D4		8MA D5	

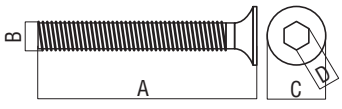

Vite con testa svasata piana con esagono.
Screw - contersunk head - hexagonal cut.
Vis assemblage tête evasee hexagonale.
Schraube mit flach ausgestelltem Kopf und Sechskantausspa-rung.

MATERIALE - MATERIAL - MATIÉRE - MATERIAL

acciaio - steel - acier - Stahl.

FINITURE - FINISHES - EXECUTIONS - AUSFUEHAUNGEN

zincato - tropicalizzato. galvanized - tropicalised.
zingué - tropicalisé. verzinkt - tropenfest.

879

Amm	Bmm	Pz./Pcs.
M6	11	2000
M6	13,5	1500

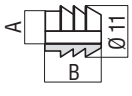

Bussola.
Sleeve.
Douille.
Buchse.

MATERIALE - MATERIAL - MATIÉRE - MATERIAL

nylon - nylon - nylon - Nylon.

880

Vite a cannocchiale filetto 5MA.
Telescopic screw, thread 5MA.
Vis télescopique filet 5MA.
Hohlschraube Gewinde 5MA.

A+Bmm	15	20	25	30	35	40	45	50	55	60	70
Pz.Pcs.	300	250	200	175	150	250	200	200	150	150	150

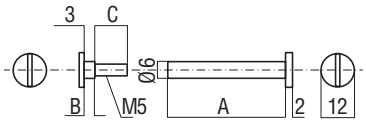

MATERIALE - MATERIAL - MATIÉRE - MATERIAL

ottone - brass - laiton - Messing.

FINITURE - FINISHES - EXECUTIONS - AUSFUEHAUNGEN

lucido - polished - brillant - glänzend.

881

Vite per album filetto 4MA.
Connector, thread 4MA.
Vis a relier filet 4MA.
Schraube Album Gewinde 4MA.

Amm	5	7,5	10	12,5	15	20	25	30	35	40	45	50	60	70
Pz.Pcs.	450	375	300	250	250	350	300	250	200	300	300	250	200	150

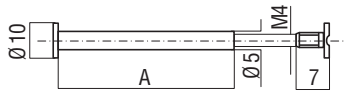

MATERIALE - MATERIAL - MATIÉRE - MATERIAL

ottone - brass - laiton - Messing.

FINITURE - FINISHES - EXECUTIONS - AUSFUEHAUNGEN

lucido - polished - brillant - glänzend.

882

Distanziale filetto 6MA.
Connector, thread 6MA.
Vis assemblage filet 6MA.
Abstandhalter Gewinde 6MA.

Amm	14	20	25	30
Pz.Pcs.	200	200	200	200

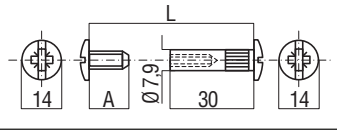

MATERIALE - MATERIAL - MATIÉRE - MATERIAL

acciaio - steel - acier - Stahl.

FINITURE - FINISHES - EXECUTIONS - AUSFUEHAUNGEN

ottonato - nichelato - bronzato.
brass plated - nickeled - bronzed.
laitonné - nickelé - bronze.
vermessingt - vernickelt - bronziert.

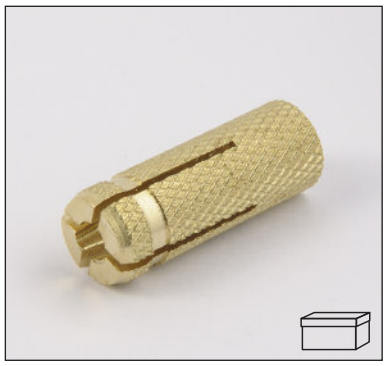

883

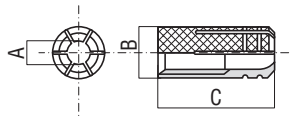

A mm	4M	5M	6M	8M	10M	12M	14M	16M
B mm	5	6,5	8	10	12	15	18	20
C mm	16	21	23	28	34	38	43	46
Pz./Pcs.	700	350	200	200	130	70	50	35

Tassello godronato.
Cheville godronnée.

Embossed sleeve.
Gerändelter Dübel.

MATERIALE - MATERIAL - MATIÉRE - MATERIAL

ottone - brass - laiton - Messing.

FINITURE - FINISHES - EXECUTIONS - AUSFUEHAUNGEN

lucido - polished - brillant - glänzend.

884

884

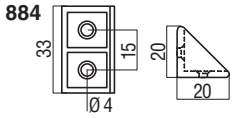

884+T

884+T

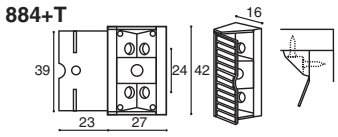

884 Giunzione angolare
884 Corner connector
884 Jonction d'angle
884 Winkelkoppelung

884+T giunzione angolare con tappo.
884+T corner connector with cap.
884+T jonction d'angle avec Capuchon.
884+T Winkelkoppelung mit kappe.

MATERIALE - MATERIAL - MATIÉRE - MATERIAL

plastica - plastic - plastique - Plastik.

FINITURE - FINISHES - EXECUTIONS - AUSFUEHAUNGEN

884 Bianco - marrone - nero (e beige - grigio solo per 884+T).
884 White - brown - black (and beige - grey only for 884+T).
884 Blanc - marron - noir (et beige - gris seulement pour 884+T).
884 Weiß - Braun - Schwarz (und Beige - Grau nur für 884+T).

885

Giunzione in plastica per mobili, vite autofilettante 4x25mm.
Plastic connector for furniture, self-tapping screws 4x25mm.
Jonction en plastique pour meubles, vis autotaraudeuse 4x25 mm.
Plastikkoppelung für Möbel, selbstschneidende Schraube 4x25 mm.

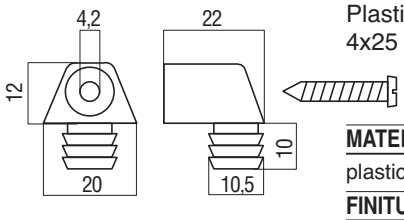

MATERIALE - MATERIAL - MATIÉRE - MATERIAL

plastica - plastic - plastique - Plastik.

FINITURE - FINISHES - EXECUTIONS - AUSFUEHAUNGEN

bianco - marrone - nero.
blanc - marron - noir.

white - brown - black.
Weiß - Braun - Schwarz.

886

Giunzione in plastica per mobili, vite M6x22 e bussola nylon.
Plastic connector for furniture, M6x22 screws and nylon bushing.
Jonction en plastique pour meubles, vis M6x22 et douille nylon.
Plastikkoppelung für Möbel, Schraube M6 x 22 und Nylonbuchse.

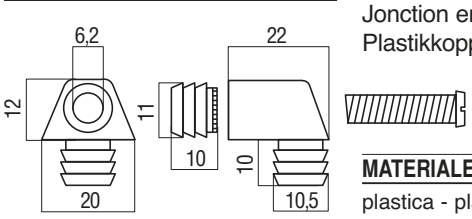

MATERIALE - MATERIAL - MATIÉRE - MATERIAL

plastica - plastic - plastique - Plastik.

FINITURE - FINISHES - EXECUTIONS - AUSFUEHAUNGEN

bianco - marrone - nero.
blanc - marron - noir.

white - brown - black.
Weiß - Braun - Schwarz.

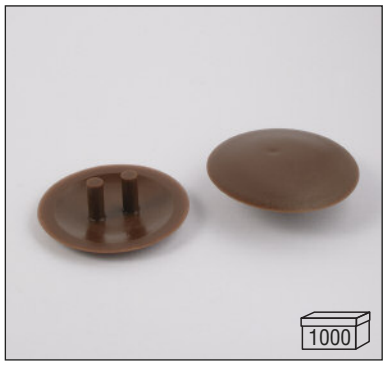

887

Cerchietto per eccentrico.
Cap for cam.
Capuchion pour excentrique.
Exzentrischer Haltering.

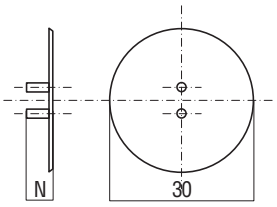

MATERIALE - MATERIAL - MATIÉRE - MATERIAL

plastica - plastic - plastique - Plastik.

FINITURE - FINISHES - EXECUTIONS - AUSFUEHAUNGEN

bianco - marrone - nero.
blanc - marron - noir.

white - brown - black.
Weiß - Braun - Schwarz.

888

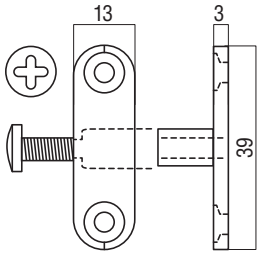

Giunzione.
Connector
Jonction.
Koppelung.

MATERIALE - MATERIAL - MATIÉRE - MATERIAL

zama - zamak - zamac - Zamak

FINITURE - FINISHES - EXECUTIONS - AUSFUEHAUNGEN

tropicalizzato - tropicalised - tropicalisé - tropenfest.

Ø	Pz. Pcs.	
9	60	6000
13	20	5000
20	15	1800
24	12	1200

889

MATERIALE - MATERIAL - MATIÉRE - MATERIAL

plastica - plastic - plastique - Plastik.

FINITURE - FINISHES - EXECUTIONS - AUSFUEHAUNGEN

Tappo adesivo Ø 9 - Ø 13 - Ø 20 - Ø 25mm.
Adhesive cap Ø 9 - Ø 13 - Ø 20 - Ø 25mm.
Capuchon adhésive Ø 9 - Ø 13 - Ø 20 - Ø 25mm.
Koppelung Ø 9 - Ø 13 - Ø 20 - Ø 25mm.

verniciabile
paintable
peut être peint en
lackierbar

bianco
white
blanc
weiss

avorio
ivory
ivoire
elfenbeinfarben

nero
black
noir
Schwarz

grigio
grey
gris
Grau

grigio chiaro
light gray
gris clair
hellgrau

alluminio
aluminium
aluminium
Aluminium

frassino
ash wood
frêne
Esche

beige
beige
beige

rovere
oak
chêne
Eiche

rovere sbiancato
bleached oak
chêne blanchi
geweißte Eiche

faggio
beech
hêtre
Buche

abete
fir
sapin
Tanne

noce chiaro
light walnut
noyer clair
Nussbaum hell

noce scuro
dark walnut
noyer foncé
Nussbaum dunkel

noce rosso
red walnut
noyer rouge
Nussbaum rot

castagno
chestnut
châtaignier
Kastanie

ciliegio chiaro
light cherry
cerisier clair
Kirsche hell

ciliegio scuro
dark cherry
cerisier foncé
Kirsche dunkel

pero
pear
poirier
Birne

wenghé
wengé
wengé
Wenge

wenghé grigio
grey wengé
wengé gris
Wenge grau

wenghé 307
wengé 307
wengé 307
Wenge 307

MANART srl - 23876 MONTICELLO - FRAZ. CORTENUOVA (LC) ITALY - Via T. Moneta, 17 - Tel. 039.920.35.55 - 039.920.26.44 - Fax 039.920.28.01
www.manart.it e-mail: manart@manart.it

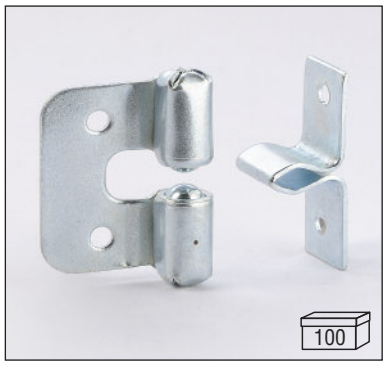

1500

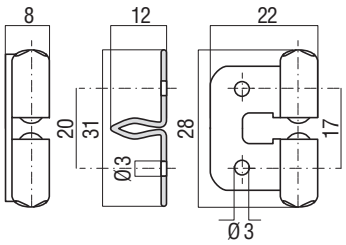

Cricchetto 2 sfere con riscontro.
Double-ball catch with strike.
Cliquet 2 sphères avec vis-à-vis.
Haltering 2 Kugeln mit Anschlag.

MATERIALE - MATERIAL - MATIÉRE - MATERIAL

acciaio - steel - acier - Stahl.

FINITURE - FINISHES - EXECUTIONS - AUSFUEHAUNGEN

zincato - tropicalizzato. galvanized - tropicalised.
zingué - tropicalisé. verzinkt - tropenfest.

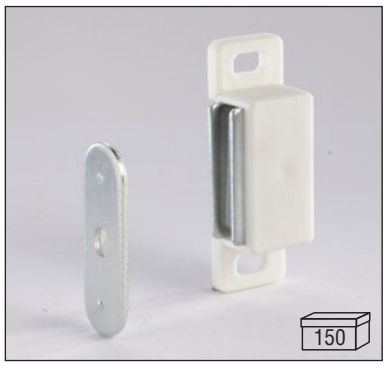

1501

forza/power kg. 6

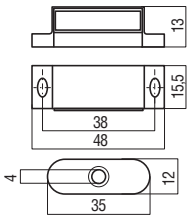

Chiusura magnetica con piastra.
Magnetic lock with plate.
Fermeture magnétique avec plaque.
Schleuse magnetisch mit Platte.

MATERIALE - MATERIAL - MATIÉRE - MATERIAL

plastica - plastic - plastique - Plastik.

FINITURE - FINISHES - EXECUTIONS - AUSFUEHAUNGEN

bianco - marrone. white - brown.
blanc - marron. Weiß - Braunl.

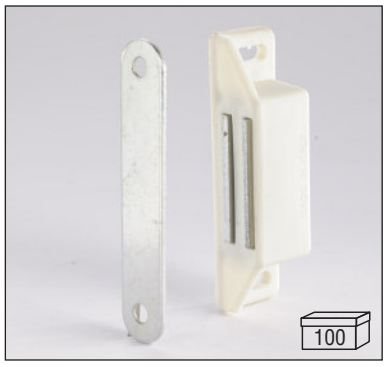

1502

forza/power kg. 8

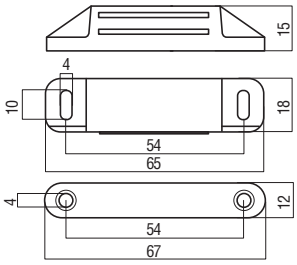

Chiusura magnetica con piastra.
Magnetic lock with plate.
Fermeture magnétique avec plaque.
Schleuse magnetisch mit Platte.

MATERIALE - MATERIAL - MATIÉRE - MATERIAL

plastica - plastic - plastique - Plastik.

FINITURE - FINISHES - EXECUTIONS - AUSFUEHAUNGEN

bianco - marrone. white - brown.
blanc - marron. Weiß - Braunl.

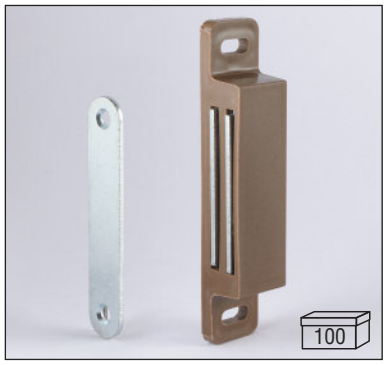

1503

forza/power kg. 12

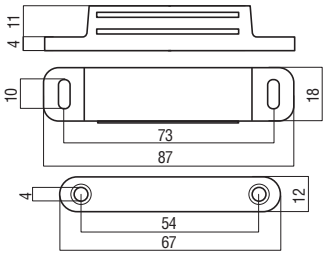

Chiusura magnetica con piastra.
Magnetic lock with plate.
Fermeture magnétique avec plaque.
Schleuse magnetisch mit Platte.

MATERIALE - MATERIAL - MATIÉRE - MATERIAL

plastica - plastic - plastique - Plastik.

FINITURE - FINISHES - EXECUTIONS - AUSFUEHAUNGEN

bianco - marrone. white - brown.
blanc - marron. Weiß - Braun.

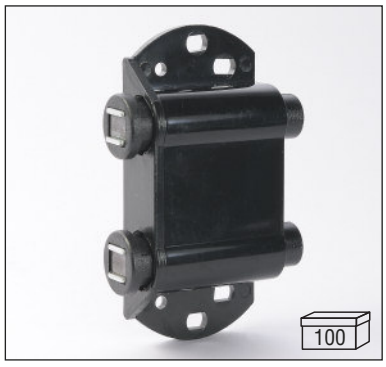

1504

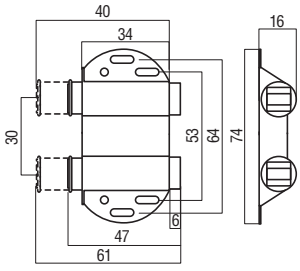

Cricchetto a 2 magneti con 2 piastre.
Double magnetic catch with 2 plates.
Double loqueteau magnetique avec 2 plates.
Haltering mit 2 Magneten und 2 Platten.

MATERIALE - MATERIAL - MATIÉRE - MATERIAL

plastica - plastic - plastique - Plastik.

FINITURE - FINISHES - EXECUTIONS - AUSFUEHAUNGEN

bianco - nero. white - black.
blanc - noir. Weiß - Schwarz.

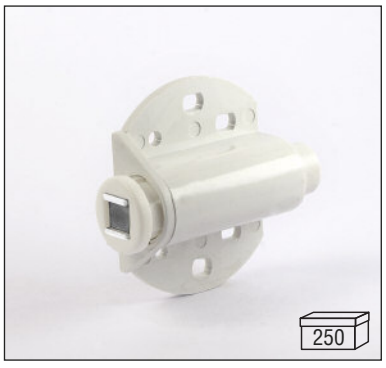

1505

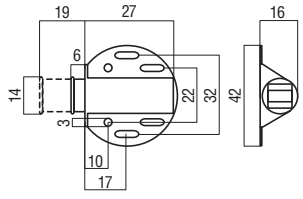

Cricchetto a 1 magnete con piastra.
Magnetic catch with plate.
Loqueteau magnetique avec plate.
Haltering mit 1 Magneten und Platte.

MATERIALE - MATERIAL - MATIÉRE - MATERIAL

plastica - plastic - plastique - Plastik.

FINITURE - FINISHES - EXECUTIONS - AUSFUEHAUNGEN

bianco - nero. white - black.
blanc - noir. Weiß - Schwarz.

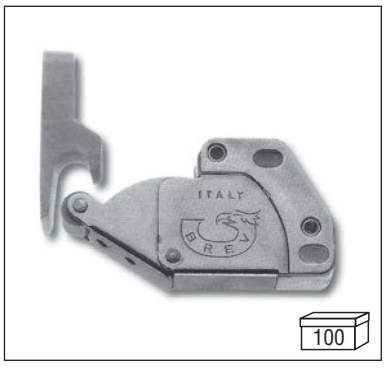

1506

Cricchetto brevettato blocca antine.
Parti in plastica: inserto, rullino, riscontro
Resistenza al calore: 90° in continuo, 150° per brevi durate
Indicativi n. 50.000 (*) cicli di lavoro completi

Cliquet breveté bloque-portes.
Parties en plastique : insert, molette, vis-à-vis.
Résistance à la chaleur : 90° en continu, 150° pour de courtes durées
Indicatifs n° 50 000 (*) cycles de travail complets

Patented touch latch.
Plastic parts: insert, roller, strike
Heat resistance: 90° continuous, 150° for short periods
Indicative n. of 50.000 (*) complete work cycles

Patentierter Haltering Türstopper.
Plastikteile: Einsatz, kleine Walze, Anschlag
Wärmebeständigkeit: 90° dauerhaft, 150° kurzfristig
Richtwert 50.000 (*) vollständige Arbeitszyklen

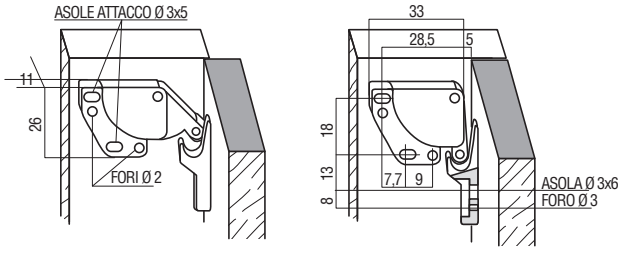

MATERIALE - MATERIAL - MATIÉRE - MATERIAL

acciaio - steel - acier - Stahl.

FINITURE - FINISHES - EXECUTIONS - AUSFUEHAUNGEN

ottonato - nichelato. brass plated - nickeled.
laitonné - nickelé. vermessingt - vernickelt.

1507

	K6	K8	K10
Amm	16	15	19
Bmm	14	14	17
Cmm	8,5	12	14
Dmm	10	14	17

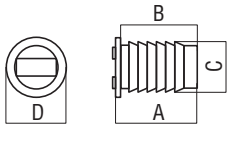

Chiusura magnetica ad incasso.
Magnetic lock.
Fermeture magnétique.
Schleuse magnetisch.

MATERIALE - MATERIAL - MATIÉRE - MATERIAL

plastica - plastic - plastique - Plastik.

FINITURE - FINISHES - EXECUTIONS - AUSFUEHAUNGEN

nero - black - noir - Schwarz.

1508

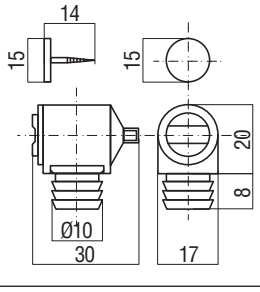

Chiusura magnetica con perno sfilabile.
Magnetic lock with loose pin.
Fermeture magnétique tourillon demontable.
Schleuse magnetisch mit ausziehbarem Zapfen.

MATERIALE - MATERIAL - MATIÉRE - MATERIAL

plastica - plastic - plastique - Plastik.

FINITURE - FINISHES - EXECUTIONS - AUSFUEHAUNGEN

bianco - noce. white - brown.
blanc - marron. Weiß - Braun.

1509

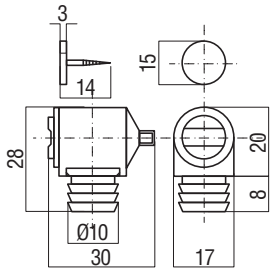

Chiusura magnetica con perno fisso.
Magnetic lock with fixed pin.
Fermeture magnétique tourillon fixe.
Schleuse magnetisch mit festem Zapfen.

MATERIALE - MATERIAL - MATIÉRE - MATERIAL

plastica - plastic - plastique - Plastik.

FINITURE - FINISHES - EXECUTIONS - AUSFUEHAUNGEN

bianco - noce. white - brown.
blanc - marron. Weiß - Braun.

1510

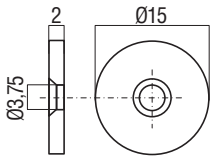

Incontro per art. 1507.
Catch strike for art. 1507.
Devant pour les art. 1507.
Verbindung für Artikel 1507.

MATERIALE - MATERIAL - MATIÉRE - MATERIAL

acciaio - steel - acier - Stahl.

FINITURE - FINISHES - EXECUTIONS - AUSFUEHAUNGEN

zincato - galvanized - zingué - verzinkt.

1530

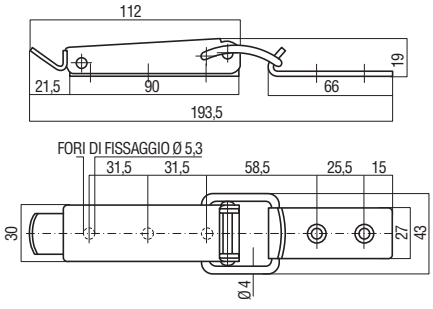

Chiusura a leva.
Carico max lavoro: 2000N (*) - Carico max tensione: 4000N (*)

Lever action closing.
Max. workload: 2000N (*) - Max. tension load: 4000N(*)

Fermeture à levier.
Charge max. travail: 2000N (*) - Charge max. tension: 4000N(*)

Hebelschließung.
Zulässige Maximallast: 2000N (*)
Zulässige Maximalspannung: 4000N (*)

MATERIALE - MATERIAL - MATIÉRE - MATERIAL

acciaio - steel - acier - Stahl.

FINITURE - FINISHES - EXECUTIONS - AUSFUEHAUNGEN

grezzo - nichelato - zincato - inox.
unfinished - nickeled - galvanized - stainless steel.
brut - nickelé - zingué - inox.
roh - vernickelt - verzinkt - Edelstahl.

1531

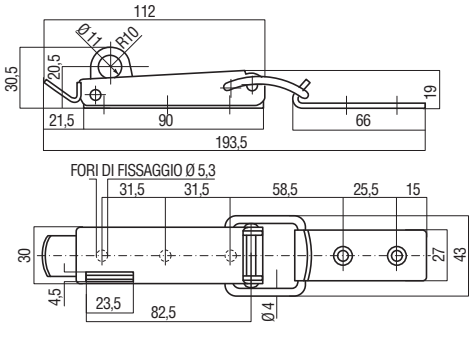

Chiusura a leva per lucchetto.
Carico max lavoro: 2000N (*) - Carico max tensione: 4000N (*)
NOTA: per versione inox linguetta per lucchetto situata sul lato opposto

Lever action closing for lock.
Max. workload: 2000N (*) - Max. tension load: 4000N (*)
NOTE: for stainless steel model, lock tab located on opposite side

Fermeture à levier pour cadenas.
Charge max. travail: 2000N (*) - Charge max. tension: 4000N (*)
REMARQUE : pour la version inox languette pour cadenas située sur le côté opposé.

Hebelschließung für Verriegelung.
Zulässige Maximallast: 2000N (*)
Zulässige Maximalspannung: 4000N (*)
ANMERKUNG: Bei der Version in Edelstahl befindet sich die Feder für die Verriegelung auf der entgegengesetzten Seite

MATERIALE - MATERIAL - MATIÉRE - MATERIAL

acciaio - steel - acier - Stahl.

FINITURE - FINISHES - EXECUTIONS - AUSFUEHAUNGEN

grezzo - nichelato - zincato - inox.
unfinished - nickeled - galvanized - stainless steel.
brut - nickelé - zingué - inox.
roh - vernickelt - verzinkt - Edelstahl.

1532

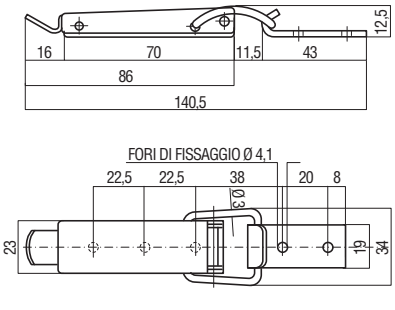

Chiusura a leva.
Carico max lavoro: 1500N (*) - Carico max tensione: 3000N (*)

Lever action closing.
Max. workload: 1500N (*) - Max. tension load: 3000N (*)

Fermeture à levier.
Charge max. travail: 1500N (*) - Charge max. tension: 3000N (*)

Hebelschließung.
Zulässige Maximallast: 1500N (*)
Zulässige Maximalspannung: 3000N (*)

MATERIALE - MATERIAL - MATIÉRE - MATERIAL

acciaio - steel - acier - Stahl.

FINITURE - FINISHES - EXECUTIONS - AUSFUEHAUNGEN

grezzo - nichelato - zincato - inox.
unfinished - nickeled - galvanized - stainless steel.
brut - nickelé - zingué - inox.
roh - vernickelt - verzinkt - Edelstahl.

1533

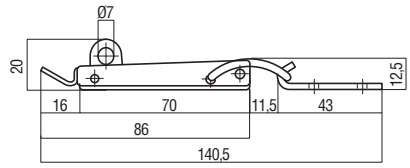

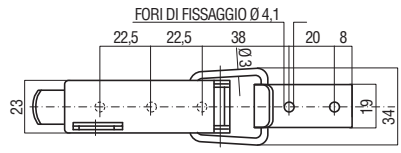

Chiusura a leva per lucchetto.
Carico max lavoro: 1500N (*) - Carico max tensione: 3000N (*)

Lever action closing for lock.
Max. workload: 1500N (*) - Max. tension load: 3000N (*)

Fermeture à levier pour cadenas.
Charge max. travail: 1500N (*) - Charge max. tension: 3000N (*)

Hebelschließung für Verriegelung.
Zulässige Maximallast: 1500 N (*)
Zulässige Maximalspannung: 3000 N (*)

MATERIALE - MATERIAL - MATIÉRE - MATERIAL

acciaio - steel - acier - Stahl.

FINITURE - FINISHES - EXECUTIONS - AUSFUEHAUNGEN

grezzo - nichelato - zincato - inox.
unfinished - nickeled - galvanized - stainless steel.
brut - nickelé - zingué - inox.
roh - vernickelt - verzinkt - Edelstahl.

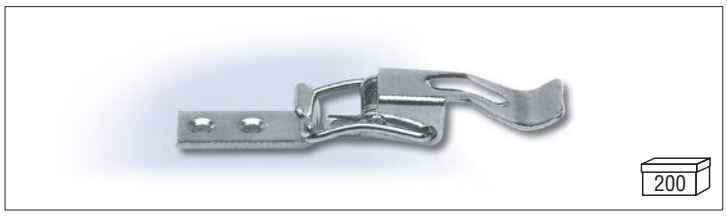

1534

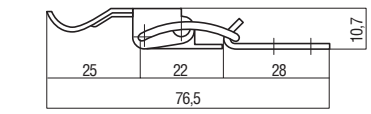

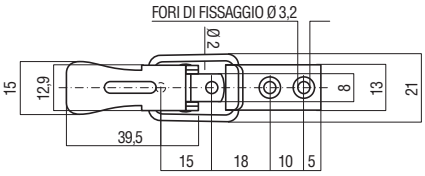

Chiusura a leva.
Carico max lavoro: 400N (*) - Carico max tensione: 1000N (*)

Lever action closing.
Max. workload: 400N (*) - Max. tension load: 1000N (*)

Fermeture à levier. Charge max. travail: 400N (*)
Charge max. tension: 1000N (*)

Hebelschließung. Zulässige Maximallast: 400N (*)
Zulässige Maximalspannung: 1000N (*)

MATERIALE - MATERIAL - MATIÉRE - MATERIAL

acciaio - steel - acier - Stahl.

FINITURE - FINISHES - EXECUTIONS - AUSFUEHAUNGEN

grezzo - nichelato - zincato - inox.
unfinished - nickeled - galvanized - stainless steel.
brut - nickelé - zingué - inox.
roh - vernickelt - verzinkt - Edelstahl.

1535

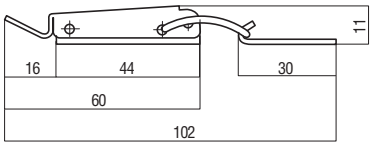

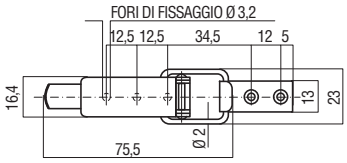

Chiusura a leva. Carico max lavoro: 550N(*)
Carico max tensione: per ferro 1300N, per inox 200N(*)

Lever action closing. Max. workload: 550N (*)
Max. tension load: 1300N for iron, 200N for stainless steel (*)

Fermeture à levier. Charge max. travail: 550N (*)
Charge max. tension: pour le fer 1300N, pour l'inox 200N (*)

Hebelschließung. Zulässige Maximallast: 550N (*)
Zulässige Maximalspannung: für Eisen 1300 N, für Edelstahl 200N (*)

MATERIALE - MATERIAL - MATIÉRE - MATERIAL

acciaio - steel - acier - Stahl.

FINITURE - FINISHES - EXECUTIONS - AUSFUEHAUNGEN

grezzo - nichelato - zincato - inox.
unfinished - nickeled - galvanized - stainless steel.
brut - nickelé - zingué - inox.
roh - vernickelt - verzinkt - Edelstahl.

1536

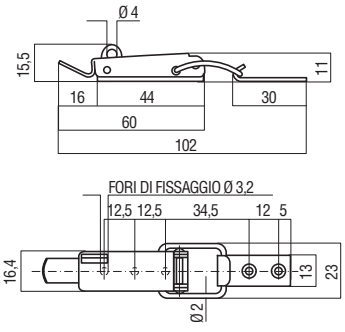

Chiusura a leva per lucchetto.
Carico max lavoro: 550N (*)
Carico max tensione: per ferro 1300N, per inox 200N (*)

Lever action closing for lock. Max. workload: 550N (*)
Max. tension load: 1300N for iron, 200N for stainless steel (*)

Fermeture à levier pour cadenas. Charge max. travail : 550N (*)
Charge max. tension: pour le fer 1 300N, pour l'inox 200N (*)

Hebelschließung für Verriegelung.
Zulässige Maximallast: 550 N (*)
Zulässige Maximalspannung: für Eisen 1300 N, für Edelstahl 200N (*)

MATERIALE - MATERIAL - MATIÉRE - MATERIAL

acciaio - steel - acier - Stahl.

FINITURE - FINISHES - EXECUTIONS - AUSFUEHAUNGEN

grezzo - nichelato - zincato - inox.
unfinished - nickeled - galvanized - stainless steel.
brut - nickelé - zingué - inox.
roh - vernickelt - verzinkt - Edelstahl.

1537

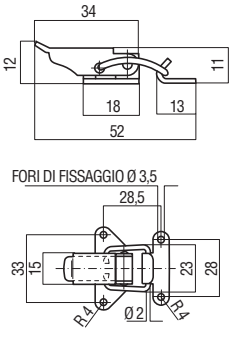

Chiusura a leva.
Carico max lavoro: 550N (*) - Carico max tensione: 1500N (*)

Lever action closing.
Max. workload: 550N (*) - Max. tension load: 1500N (*)

Fermeture à levier.
Charge max. travail: 550N (*) - Charge max. tension: 1500N (*)

Hebelschließung.
Zulässige Maximallast: 550N (*)
Zulässige Maximalspannung: 1500N (*)

MATERIALE - MATERIAL - MATIÉRE - MATERIAL

acciaio - steel - acier - Stahl.

FINITURE - FINISHES - EXECUTIONS - AUSFUEHAUNGEN

grezzo - nichelato - zincato - inox.
unfinished - nickeled - galvanized - stainless steel.
brut - nickelé - zingué - inox.
roh - vernickelt - verzinkt - Edelstahl.

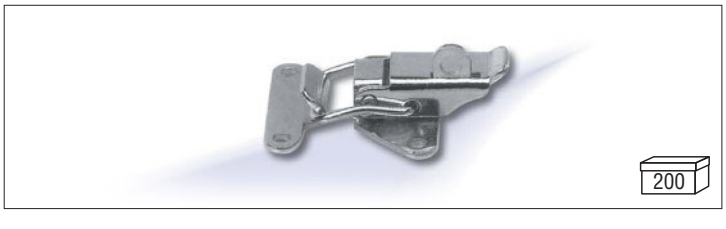

1538

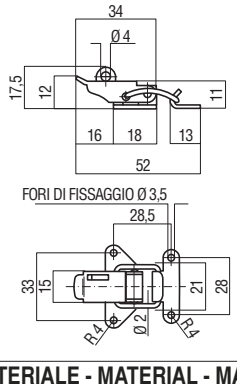

Chiusura a leva per lucchetto.
Carico max lavoro: 550N (*) - Carico max tensione: 1500N (*)

Lever action closing for lock.
Max. workload: 550N (*) - Max. tension load: 1500N (*)

Fermeture à levier pour cadenas.
Charge max. travail: 550N (*) - Charge max. tension: 1500N (*)

Hebelschließung für Verriegelung.
Zulässige Maximallast: 550 N (*)
Zulässige Maximalspannung: 1500 N (*)

MATERIALE - MATERIAL - MATIÉRE - MATERIAL

acciaio - steel - acier - Stahl.

FINITURE - FINISHES - EXECUTIONS - AUSFUEHAUNGEN

grezzo - nichelato - zincato .
unfinished - nickeled - galvanized.
brut - nickelé - zingué.
roh - vernickelt - verzinkt.

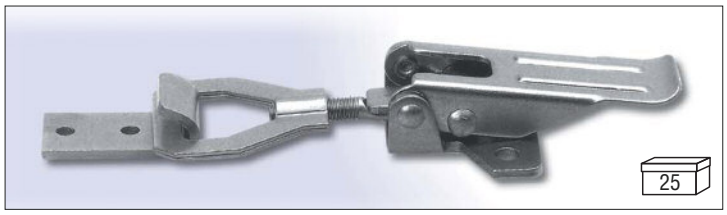

1539

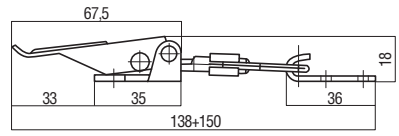

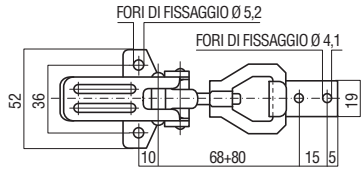

Chiusura a leva regolabile
Carico max lavoro: 1100N (*) - Carico max tensione: 2500N (*)

Adjustable lever action closing.
Max. workload: 1100N (*) - Max. tension load: 2500N (*)

Fermeture à levier réglable.
Charge max. travail: 1100N (*) - Charge max. tension: 2500N (*)

Hebelschließung Einstellbare.
Zulässige Maximallast: 1100N (*)
Zulässige Maximalspannung: 2500N (*)

MATERIALE - MATERIAL - MATIÉRE - MATERIAL

acciaio - steel - acier - Stahl.

FINITURE - FINISHES - EXECUTIONS - AUSFUEHAUNGEN

grezzo - nichelato - zincato - inox.
unfinished - nickeled - galvanized - stainless steel.
brut - nickelé - zingué - inox.
roh - vernickelt - verzinkt - Edelstahl.

1540

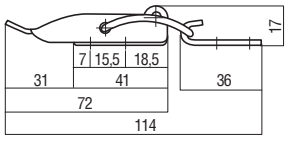

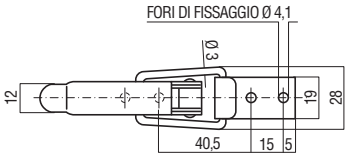

Chiusura a leva
Carico max lavoro: 1000N (*) - Carico max tensione: 2500N (*)

Lever action closing.
Max. workload: 1000N (*) - Max. tension load: 2500N (*)

Fermeture à levier.
Charge max. travail: 1000N (*) - Charge max. tension: 2500N (*)

Hebelschließung.
Zulässige Maximallast: 1000N (*)
Zulässige Maximalspannung: 2500N (*)

MATERIALE - MATERIAL - MATIÉRE - MATERIAL

acciaio - steel - acier - Stahl.

FINITURE - FINISHES - EXECUTIONS - AUSFUEHAUNGEN

grezzo - nichelato - zincato - inox.
unfinished - nickeled - galvanized - stainless steel.
brut - nickelé - zingué - inox.
roh - vernickelt - verzinkt - Edelstahl.

1541

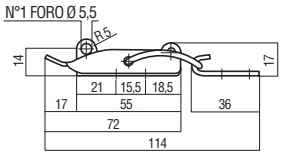

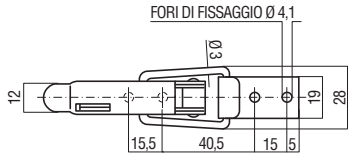

Chiusura a leva per lucchetto
Carico max lavoro: 1000N (*) - Carico max tensione: 2500N (*)

Lever action closing for lock.
Max. workload: 1000N (*) - Max. tension load: 2500N (*)

Fermeture à levier pour cadenas.
Charge max. travail: 1000N (*) - Charge max. tension: 2500N (*)

Hebelschließung für Verriegelung.
Zulässige Maximallast: 1000N (*)
Zulässige Maximalspannung: 2500N (*)

MATERIALE - MATERIAL - MATIÉRE - MATERIAL

acciaio - steel - acier - Stahl.

FINITURE - FINISHES - EXECUTIONS - AUSFUEHAUNGEN

grezzo - nichelato - zincato - inox.
unfinished - nickeled - galvanized - stainless steel.
brut - nickelé - zingué - inox.
roh - vernickelt - verzinkt - Edelstahl.

1542

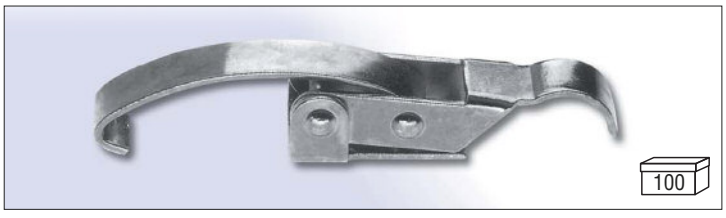

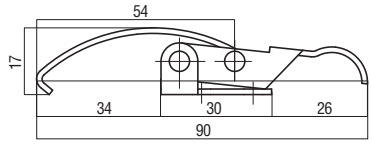

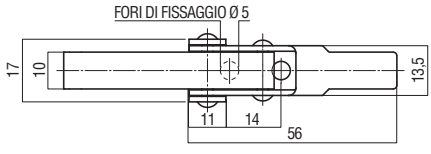

Chiusura a leva
Carico max lavoro: 500N (*) - Carico max tensione: 900N (*)

Lever action closing.
Max. workload: 500N (*) - Max. tension load: 900N (*)

Fermeture à levier.
Charge max. travail: 500N (*) - Charge max. tension: 900N (*)

Hebelschließung.
Zulässige Maximallast: 500N (*)
Zulässige Maximalspannung: 900N (*)

MATERIALE - MATERIAL - MATIÉRE - MATERIAL

acciaio - steel - acier - Stahl.

FINITURE - FINISHES - EXECUTIONS - AUSFUEHAUNGEN

grezzo - nichelato - zincato - inox.
unfinished - nickeled - galvanized - stainless steel.
brut - nickelé - zingué - inox.
roh - vernickelt - verzinkt - Edelstahl.

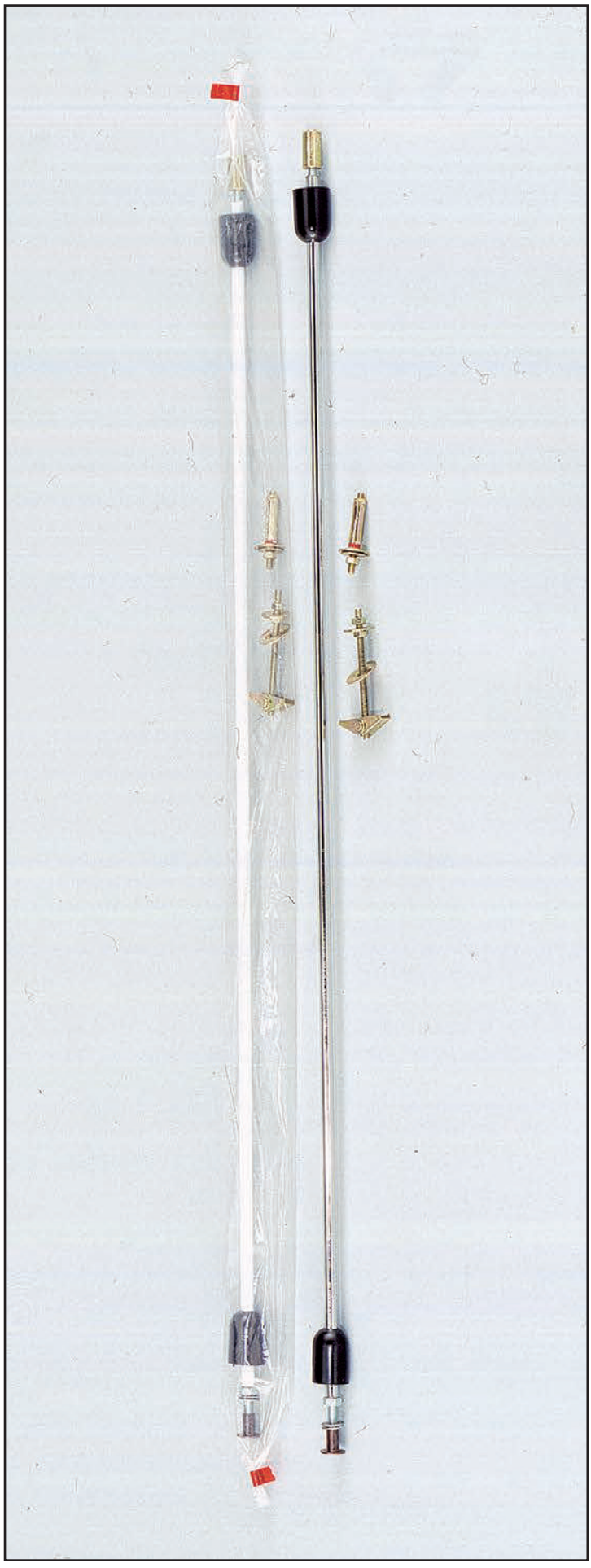

ART. M1000

Supporto Ø 10 mm. per mensole pensili - cm. 50 - cm. 100
Shelf fitting Ø 10 - cm. 50 - cm. 100 length
Support de sol Ø 10 - cm. 50 - cm. 100 de longueur
Bodentraeger Ø 10 - cm. 50 - cm. 100 lang

MATERIALE - MATERIAL - MATIÈRE - MATERIAL

Acciaio - Steel - Fer - Stahl

FINITURE - FINISHES - EXÉCUTIONS - AUSFUEHRUNGEN

Cromato - Ottonato - Verniciato - Nickel satinato
Chrome Plated - Brass Plated -Varnished - Nickel satinato
Chrome - Laitonne - Verni - Nickel satiné
Verchromt - Vermessingt - Lackiert - Nickel satiniert

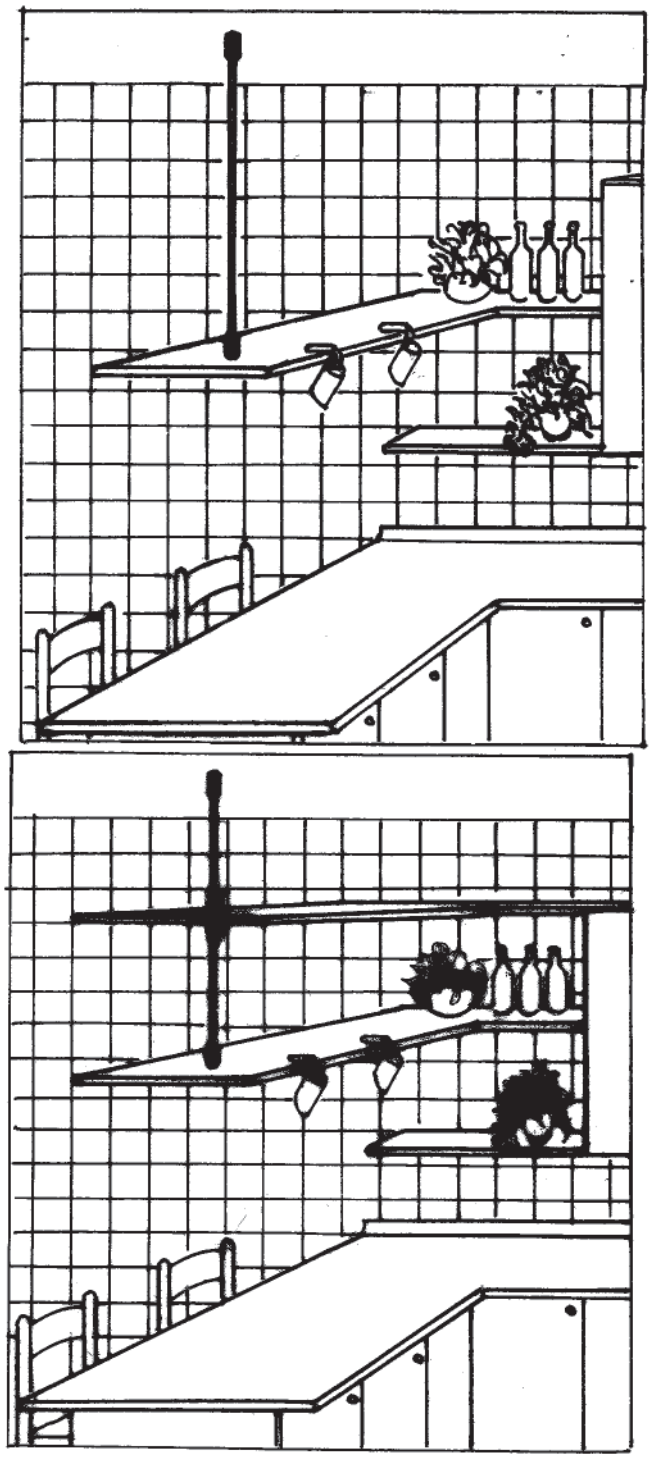

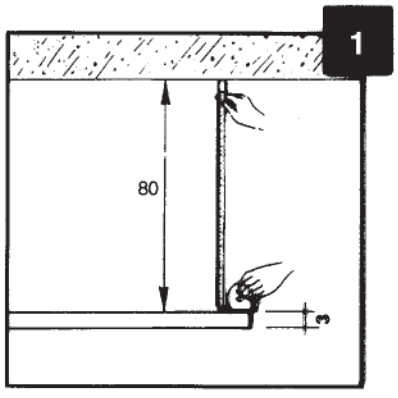

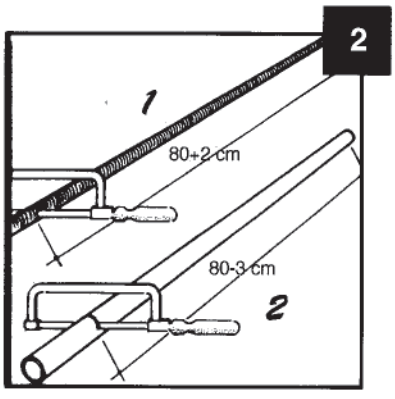

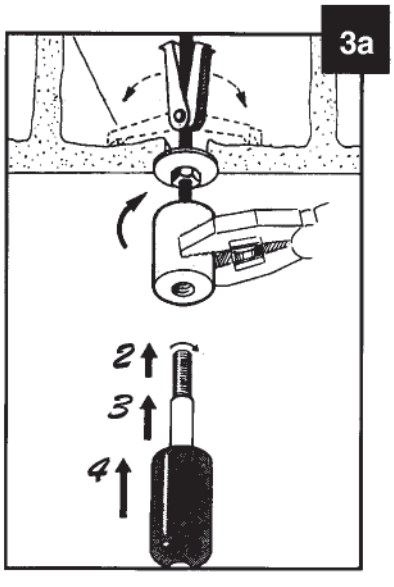

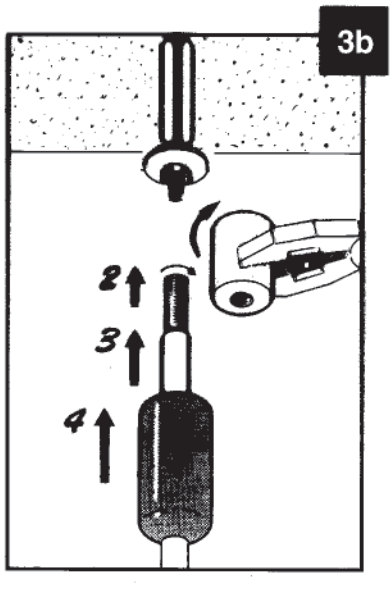

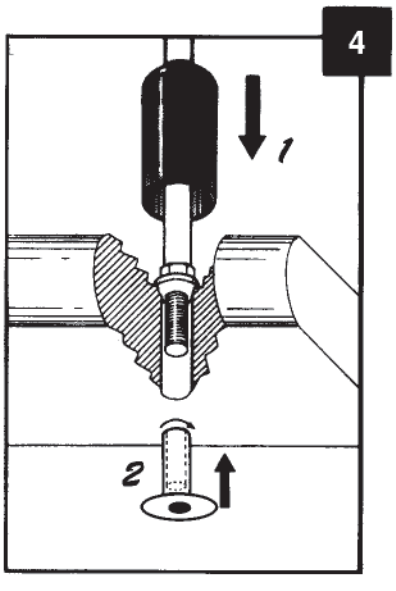

MANART srl - 23876 MONTICELLO (LC) - Via T. Moneta, 17 - Fraz. Cortenuova - Tel. 039.9203555 - 039.9202644 - Fax 039.9202801
e-mail: manart@manart.it - www.manart.it

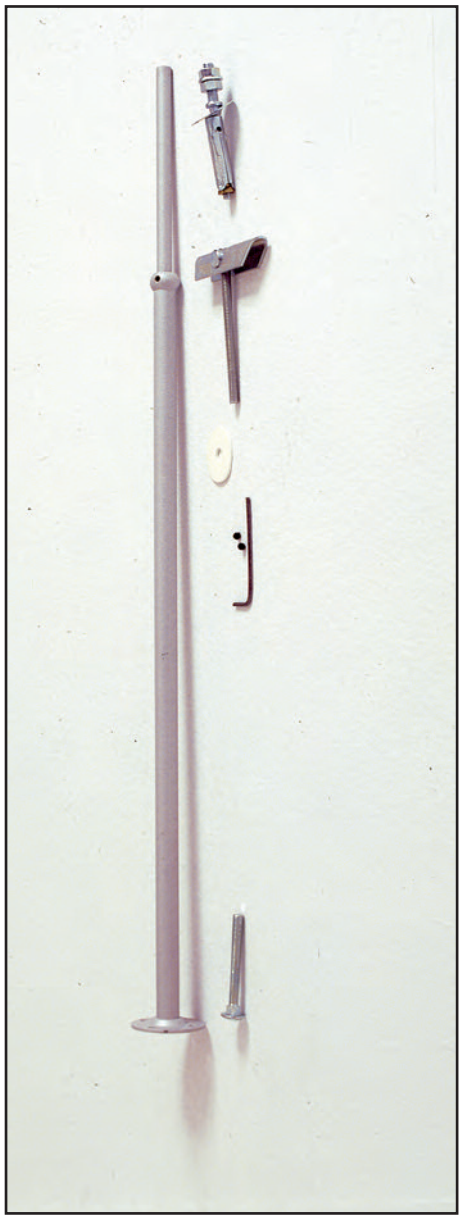

ART. M 1005-1006-1007

Supporto telescopico per mensole pensili Ø 16 mm.
Telescopic support for hanging shelves, Ø 16 mm.
Support télescopique pour tablettes suspendus Ø 16 mm
Auflage für hängende teleskopische Konsolen, Ø 16 mm

MATERIALE - MATERIAL - MATIÈRE - MATERIAL

Acciaio - Steem - Fer - Stahl

FINITURE - FINISHES - EXéCUTIONS - AUSFUEHRUNGEN

Cromato - Ottonato - Verniciato - Nickel satinato
Chrome Plated - Brass Plated - Varnished - Nickel satinato
Chrome - Laitonne - Verni - Nickel satiné
Verchromt - Vermessingt - Lackiert - Nickel satiniert

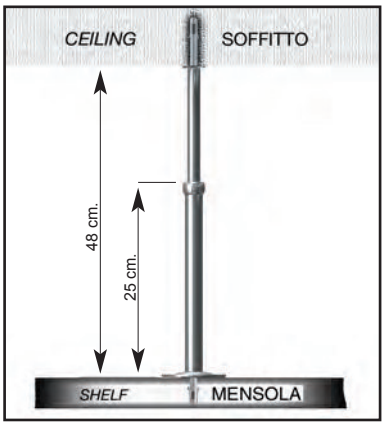

DIMENSIONI - DIMENSIONS - DIMENSIONS - DIMENSIONEN

ART. M 1005
25 cm estensibile fino a 48 cm.
25 cm extensible up to 48 cm.
25 cm extensible jusqu'à 48 cm.
25 cm bis 48 cm. dehnbar

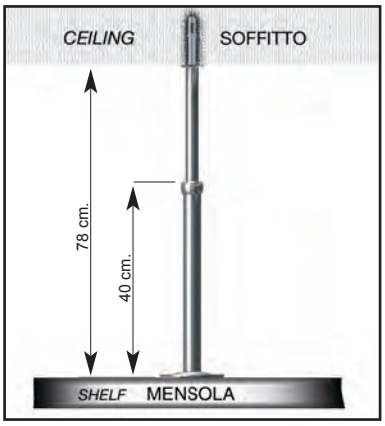

DIMENSIONI - DIMENSIONS - DIMENSIONS - DIMENSIONEN

ART. M 1006
40 cm estensibile fino a 78 cm.
40 cm extensible up to 78 cm.
40 cm extensible jusqu'à 78 cm.
40 cm bis 78 cm. dehnbar

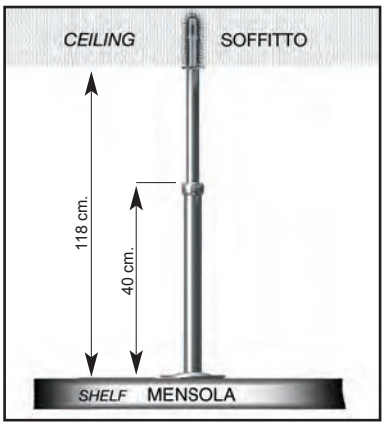

DIMENSIONI - DIMENSIONS - DIMENSIONS - DIMENSIONEN

ART. M 1007
80 cm estensibile fino a 118 cm.
80 cm extensible up to 118 cm.
80 cm extensible jusqu'à 118 cm.
80 cm bis 118 cm. dehnbar

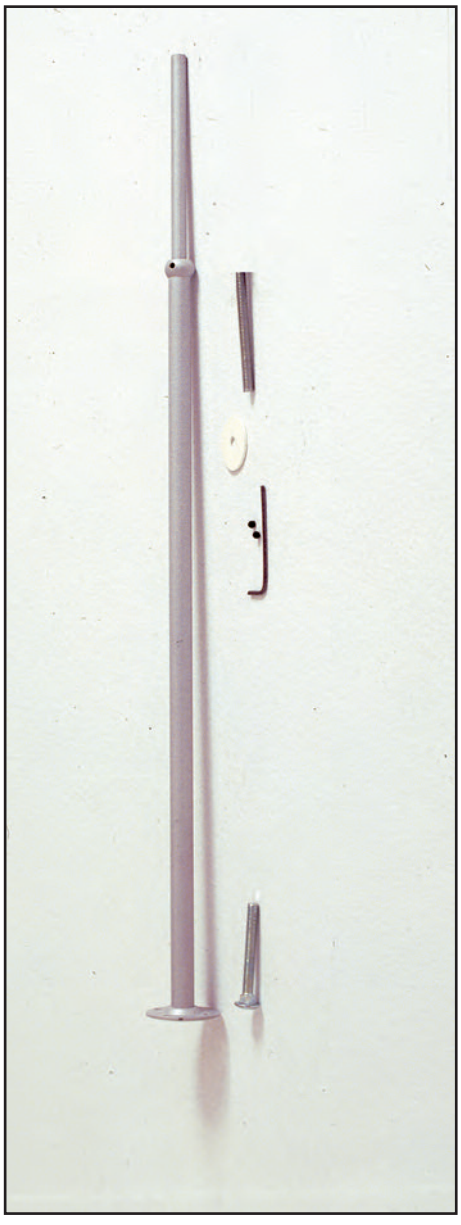

ART. M 1008

Distanziale telescopico Ø 16 mm tra due mensole pensili
Telescopic spacer Ø 16 mm between two shelves
Pièce de distanciation Ø 16 mm entre due tablettes suspendus
Teleskopische Abstandsstuck Ø 16 mm zwischen zwei Konsolen

MATERIALE - MATERIAL - MATIÈRE - MATERIAL

Acciaio - Steem - Fer - Stahl

FINITURE - FINISHES - EXéCUTIONS - AUSFUEHRUNGEN

Cromato - Ottonato - Verniciato - Nickel satinato
Chrome Plated - Brass Plated - Varnished - Nickel satinato
Chrome - Laitonne - Verni - Nickel satiné
Verchromt - Vermessingt - Lackiert - Nickel satiniert

DIMENSIONI - DIMENSIONS - DIMENSIONS - DIMENSIONEN

25 cm estensibile fino a 48 cm.
25 cm extensible up to 48 cm.
25 cm extensible jusqu'à 48 cm.
25 cm bis 48 cm. dehnbar

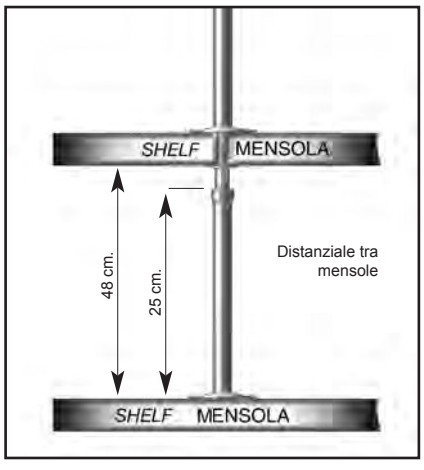

MANART srl - 23876 MONTICELLO (LC) - Via T. Moneta, 17 - Fraz. Cortenuova - Tel. 039.9203555 - 039.9202644 - Fax 039.9202801
e-mail: manart@manart.it - www.manart.it

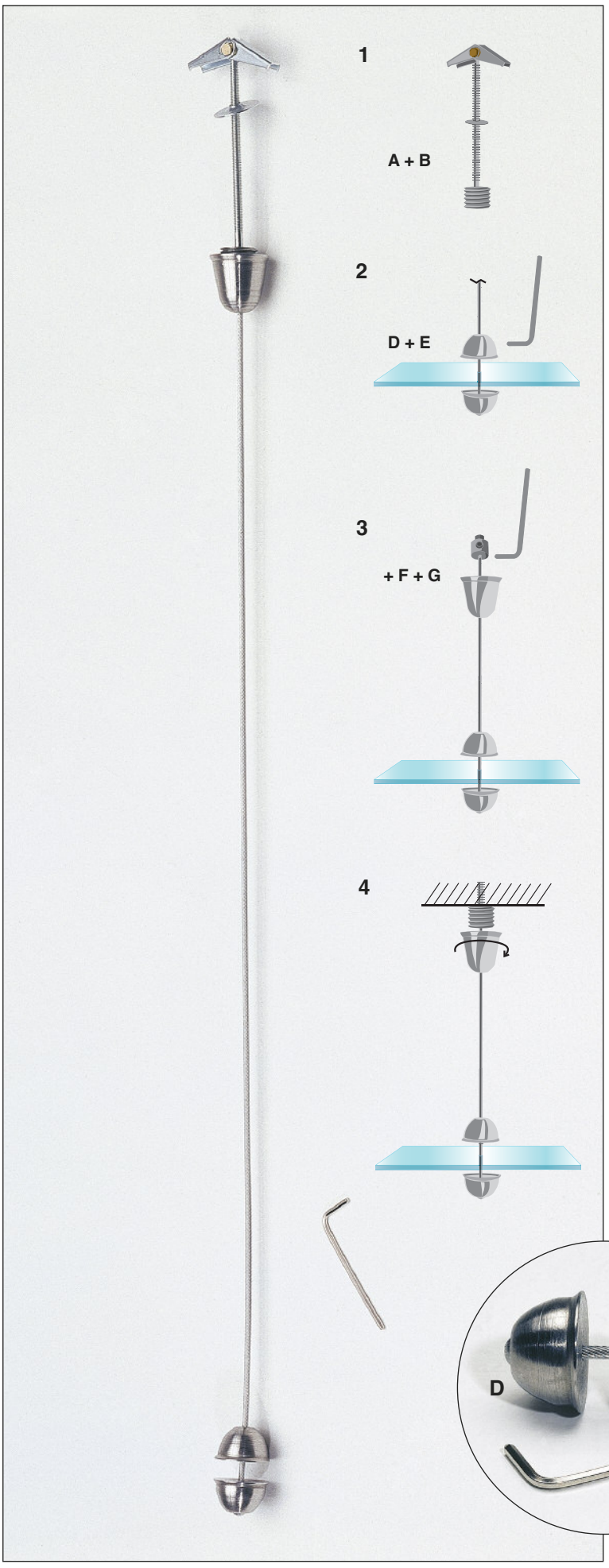

ART. M1010

SUPPORTO PER MENSOLE PENSILI IN FILO
Ø 2,5 lunghezza 100 cm
(il filo può essere tagliato su misura)

WIRE SUPPORT FOR SUSPENDED SHELVES
Ø 2.5 length 100 cm
(wire may be cut to measure)

SUPPORT POUR TABLETTES SUSPENDUES AVEC CÂBLE
Ø 2,5 cm longueur 100 cm
(Le câble peut être coupé sur mesure)

AUFHÄNGUNG FÜR HÄNGEKONSOLEN AUS DRAHT
Ø 2,5 Länge 100 cm
(Der Draht kann nach Maß gekürzt werden)

MATERIALE - MATERIAL - MATIÉRE - MATERIAL

Acciaio.
Steel.
Fer.
Stahl.

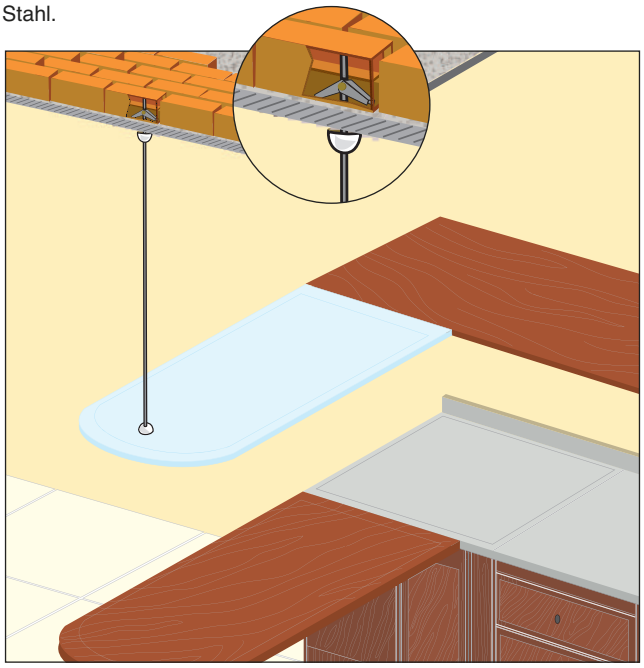

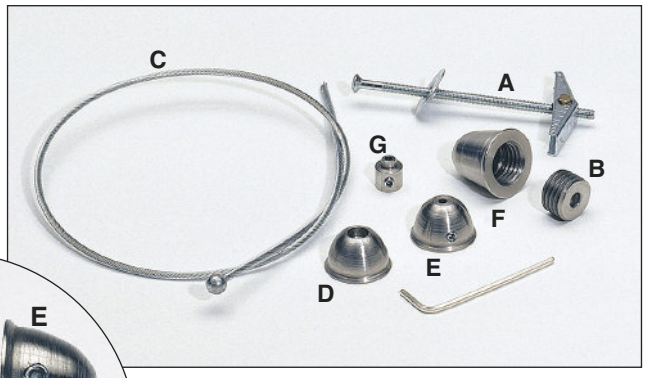

ART. M 2000/1/2

Reggimensola in metallo con copertura in ABS.
Shelf bracket in metal realized, covering with ABS.
Equerre: console en métal avec cache - vis en ABS.
Konsolestuetze aus Metal mit Decke ABS.

LUNGHEZZA - LENGHT - LONGUER - LANGE*

Art. 2000: mm 120 - Art. 2001: mm 180 - Art. 2002: mm 240

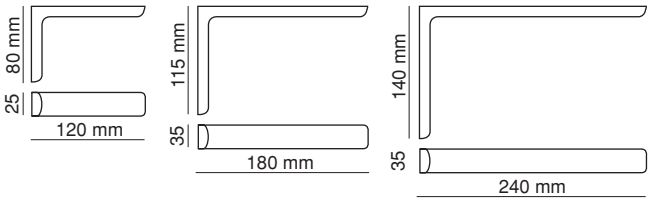

ART. M 2005

Reggimensola a scomparsa in acciaio. Smontabile in 3 pezzi.
Invisible shelf bracket made of steel. Disassemble en 3 pieces.
Fixation murale invisible fait d'acier. Démontable en 3 pièces.
Unisichtbare Konsolestuetze aus Stahl. Zerlegbar in 3 Stück.

FISSAGGIO - FIXING - FIXAGE - FIXIERUNG

Piastra 20x150 mm.
Plate 20x150 mm.
Plaque 20x150 mm.
Platte 20x150 mm.

MATERIALE - MATERIAL - MATIÉRE - MATERIAL

Acciao zincato - Zinc coated steel - Acier zingué - Verznktstahl

DIMENSIONI DISPONIBILI - AVAILABLE DIMENSION

Tubo Ø 14x150 mm - Ø 14x170 mm - Ø 14 x 200 mm.
Steel Ø 14x150 mm - Ø 14x170 mm - Ø 14 x 200 mm.
Tube Ø 14x150 mm - Ø 14x170 mm - Ø 14 x 200 mm.
Rohr Ø 14x150 mm - Ø 14x170 mm - Ø 14 x 200 mm.

ART. M 2006

Reggimensola a scomparsa con doppio tassello di espansione.
Invisible shelf bracket with double expansion plug.
Fixation murale invisible pour tablettes avec double procédé d'expansion.
Unisichtbare Konsolestuetze mit doppelt Expansionduebel.

MATERIALE - MATERIAL - MATIÉRE - MATERIAL

Interno in metallo con copertura in materiale plastico.
Inside part made of metal and cover made of plastic.
Tige centrale metallique enrobage en matiére plastique.
Innenteil aus Metall und Decke aus Kunstoff.

FISSAGGIO - FIXING - FIXAGE - FIXIERUNG

La spina di pesce non permette la fuoriuscita della mensola.
The fixing socket do not allow the exit of the bracket.
L'épine de fixage ne permette pas la sortie de la console.
Die feste Hoehlung erlaubt keinen Ausgang der Konsole.

DIMENSIONI DISPONIBILI - AVAILABLE DIMENSION

Esagono/Hexsagon/Hexagone/Sechseck E8 mm (foro/hole/trou/Bohrung Ø 10 mm).
Esagono/Hexsagon/Hexagone/Sechseck E10 mm (foro/hole/trou/Bohrung Ø 12 mm).
Esagono/Hexsagon/Hexagone/Sechseck E12 mm (foro/hole/trou/Bohrung Ø 14 mm).

ART. M 2007

Reggimensola a scomparsa con doppio tassello di espansione.
Invisible shelf bracket with double expansion plug.
Fixation murale invisible pour tablettes avec double procédé d'expansion.
Unisichtbare Konsolestuetze mit doppelt Expansionduebel.

MATERIALE - MATERIAL - MATIÉRE - MATERIAL

Tassello in materiale plastico, esagono in metallo.
Plug made of plastic and hexagon made of metal.
La cheville en matiére plastique et l'hexagone en metal.
Duebel aus Plastik und Sechseck aus Metall.

FISSAGGIO - FIXING - FIXAGE - FIXIERUNG

La spina di pesce non permette la fuoriuscita della mensola.
The fixing socket do not allow the exit of the bracket.
L'épine de fixage ne permette pas la sortie de la console.
Die feste Hoehlung erlaubt keinen Ausgang der Konsole.

DIMENSIONI DISPONIBILI - AVAILABLE DIMENSION

Esagono/Hexsagon/Hexagone/Sechseck E8 mm (foro/hole/trou/Bohrung Ø 10 mm).
Esagono/Hexsagon/Hexagone/Sechseck E10 mm (foro/hole/trou/Bohrung Ø 12 mm).
Esagono/Hexsagon/Hexagone/Sechseck E12 mm (foro/hole/trou/Bohrung Ø 14 mm).

ART. M 2008/9/10

Reggimensola in metallo.
Shelf bracket in metal.
Equerre: console en métal.
Konsolestuetze aus Metal.

FISSAGGIO - FIXING - FIXAGE - FIXIERUNG

Zincato o verniciato.
Zink plated or painted.
Zingué ou laqué.
Verzinkt oder lackiert.

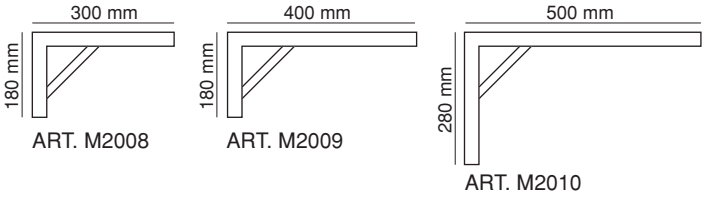

ART. M2008 ART. M2009 ART. M2010

MANART srl - 23876 MONTICELLO - FRAZ. CORTENUOVA (LC) ITALY - Via T. Moneta, 17 - Tel. 039.920.35.55 - 039.920.26.44 - Fax 039.920.28.01
www.manart.it e-mail: manart@manart.it

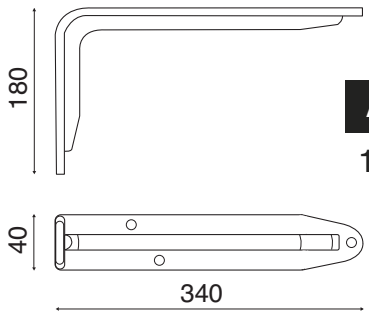

ART. M2015

180 x 340 mm

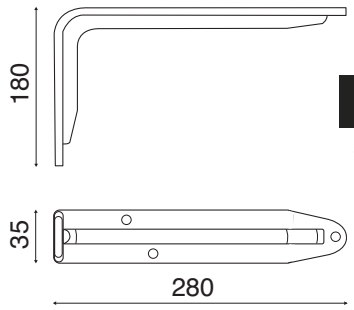

ART. M2014

180 x 280 mm

REGGIMENSOLA IN ACCIAIO.
SHELF BRACKET IN STEEL.
SUPPORT DE TABLETTE EN ACIER.
KONSOLENHALTER AUS STAHL.

FINITURE - FINISHES - EXECUTIONS - AUSFUEHRUNGEN

Verniciato marrone, bianco, rosso, nero, alluminio.
Varnished brown, white, red, black, aluminium.
Vernis marron, blanc, rouge, noir, aluminium.
Braun, Weiss, Rot, Schwarz, Aluminium Lackiert.

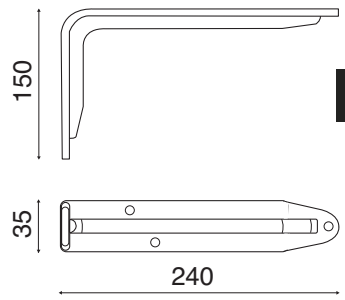

ART. M2013

150 x 240 mm

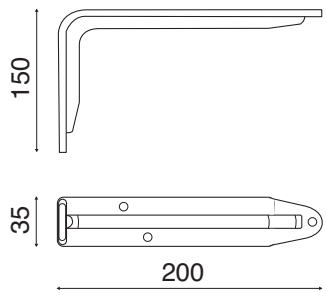

ART. M2012

150 x 200 mm

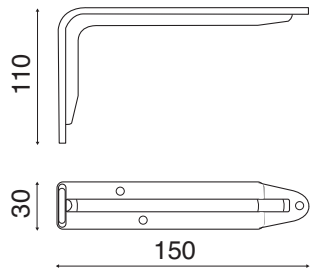

ART. M2011

110 x 150 mm

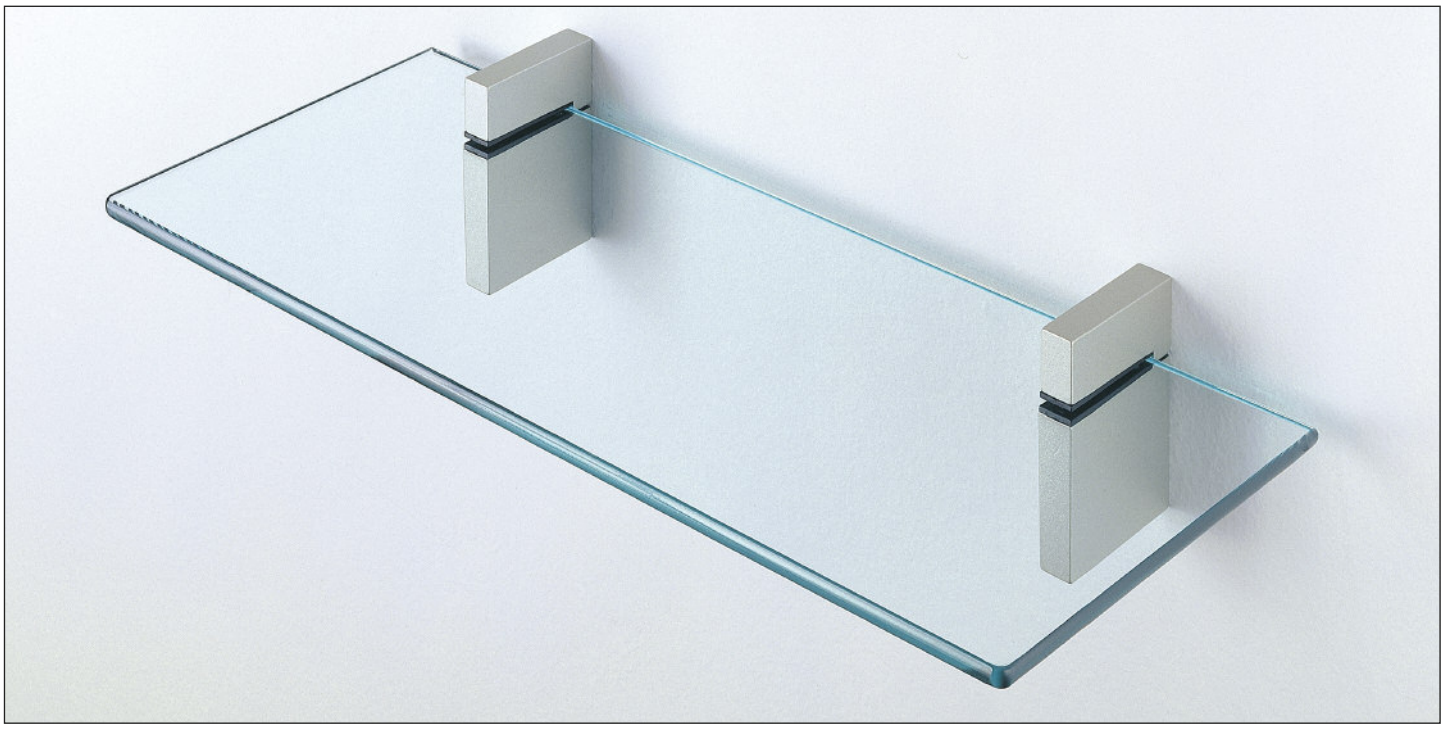

ART. 2514

MENSOLE PER RIPIANI IN CRISTALLO E LEGNO
CON SPESSORI DA 4mm A 30mm.
SHELF SUPPORTFOR SHELVES MADE OF CRYSTALL
AND WOOD WITH THICKNESS FROM 4mm TO 30mm.
CONSOLE POUR CONSOLES CRISTAL ET BOIS
AVEC ÉPAISSEUR DE 4mm À 30mm.
KONSOLESTUTZE FÜR KONSOLEN AUS KRISTALL
UND HOLZ MITDURCHMESSER VON 4mm BIS 30mm.

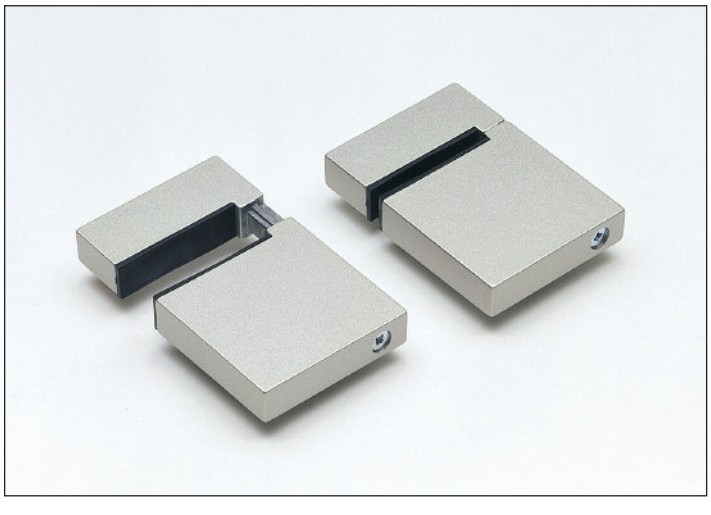

MATERIALE - MATERIAL - MATIÈRE - MATERIAL

Zama - Zamak - Zamac - Zamak.

FINITURE - FINISHES - EXECUTIONS - AUSFUEHAUNGEN

Cromato, Ottonato, Bianco, Nero, Alluminio, Verniciato Satinato.
Chromed, Brassed, White, Black, Aluminium, Satin Finish Coating.
Chromé, Laitonné, Blanc, Noir, Aluminium, Peinture Satinée.
Verchromt, Vermessing, Weiss, Schwarz, Aluminium, Satiniert Lackiert.

DIMENSIONI REGGIMENSOLA- SHELVES'DIMENSIONS
DIMENSION DE CONSOLES - DIMENSION VON KONSOLEN

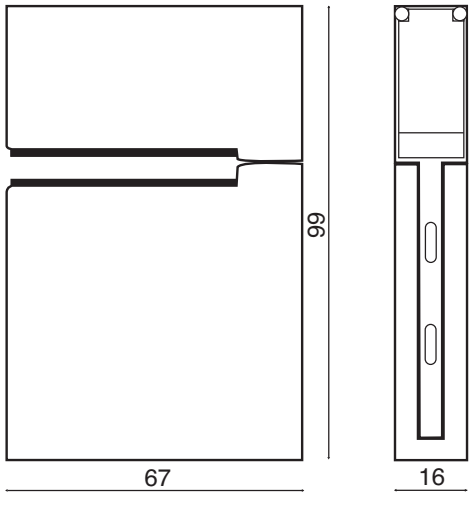

MANART srl - 23876 MONTICELLO - FRAZ. CORTENUOVA (LC) ITALY - Via T. Moneta, 17 - Tel. 039.920.35.55 - 039.920.26.44 - Fax 039.920.28.01
www.manart.it e-mail: manart@manart.it

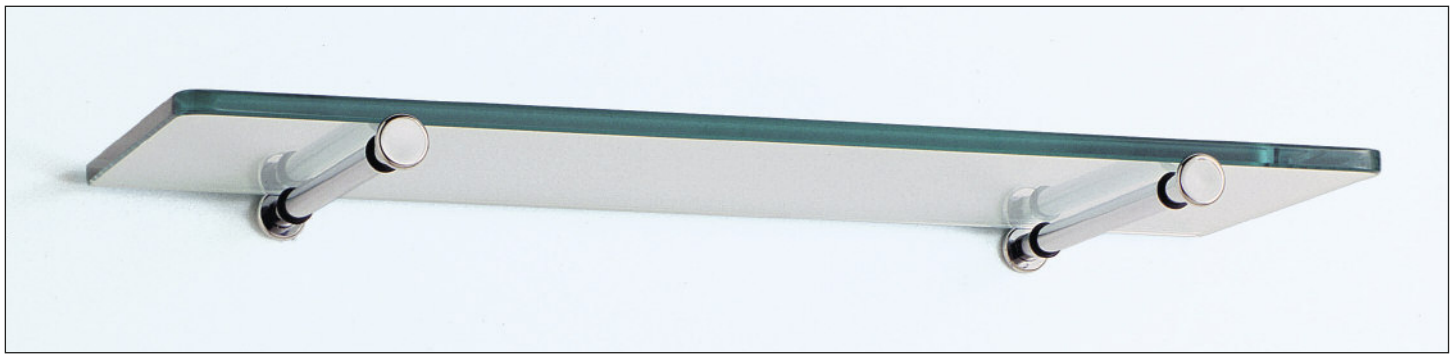

Ø 12 mm

Ø 20 mm

200 mm

210 mm

ART. 2200

REGGIMENSOLA PER RIPIANI
IN CRISTALLO.
SHELF BRACKET FOR
CRISTAL SHELVES.
TIGE DE FIXATION POUR CONSOLE
ET ÉTANGÈRE EN CRISTAL.
KONSOLESTUETZE FÜR
KRISTALLTABLARE.

DIMENSIONI - DIMENSIONS DIMENSIONS - DIMENSIONEN

Ø 12 mm x 210 mm.

FISSAGGIO - FIXING - FIXAGE - FIXIERUNG

Tassello per fissaggio a parete.
Regolazione eccentrica fino a 6 mm. (+/- 3 mm.).
Anchor for concrete fixing. Excentric adjustement up to 6 mm. (+/- 3 mm.).
Goujon pour fixation a la cloison.
Régulation excentrique jusqu'à 6 mm. (+/- 3 mm.).
Mit Duebein zur Anbringung an festen Wänden.
Exzentrische Verstellung bis zu 6 mm. (+/- 3 mm.).

FINITURE - FINISHES - EXECUTIONS - AUSFUEHRUNGEN

Cromata, ottonata, dorata, nickel satinata. Finiture speciali a richiesta.
Chome plated, brass plated, gold plated, nickel satined.
Special finishes on request.
Chromé, laitonné, doré, nickel satiné. Finitions spéciales à la demande.
Vermessingter, verchromter, vergoldeter, nickel satiniert.
Andere Oberflächen auf Anfrage.

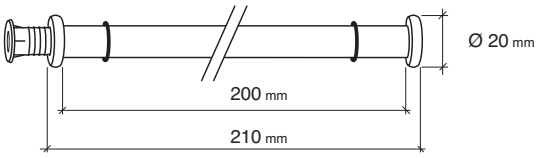

ART. 2201

REGGIMENSOLA PER RIPIANI
IN CRISTALLO.
SHELF BRACKET FOR
CRISTAL SHELVES.
TIGE DE FIXATION POUR CONSOLE
ET ÉTANGÈRE EN CRISTAL.
KONSOLESTUETZE FÜR
KRISTALLTABLARE.

DIMENSIONI - DIMENSIONS DIMENSIONS - DIMENSIONEN

Ø 12 mm x 210 mm.

FISSAGGIO - FIXING - FIXAGE - FIXIERUNG

Fissaggio a pannelli in legno spessore 16-22 mm. Regolazione eccentrica fino a 6 mm. (+/- 3 mm.).
Fixing on a wooden panel thickness 16-22 mm. Excentric adjustement up to 6 mm. (+/- 3 mm.).
Fixation par panneaux en bois à commencer de 16-22 mm. d'épaisseur.
Régulation excentrique jusqu'à 6 mm. (+/- 3 mm.).
Befestigung an Holzpanelen mit eine Stärke von 16-22 mm. Exzentrische Befestigung bis zu 6 mm. (+/- 3 mm.).

FINITURE - FINISHES - EXECUTIONS - AUSFUEHRUNGEN

Cromata, ottonata, dorata, nickel satinata. Finiture speciali a richiesta.
Chome plated, brass plated, gold plated, nickel satined.
Special finishes on request.
Chromé, laitonné, doré, nickel satiné. Finitions spéciales à la demande.
Vermessingter, verchromter, vergoldeter, nickel satiniert.
Andere Oberflächen auf Anfrage.

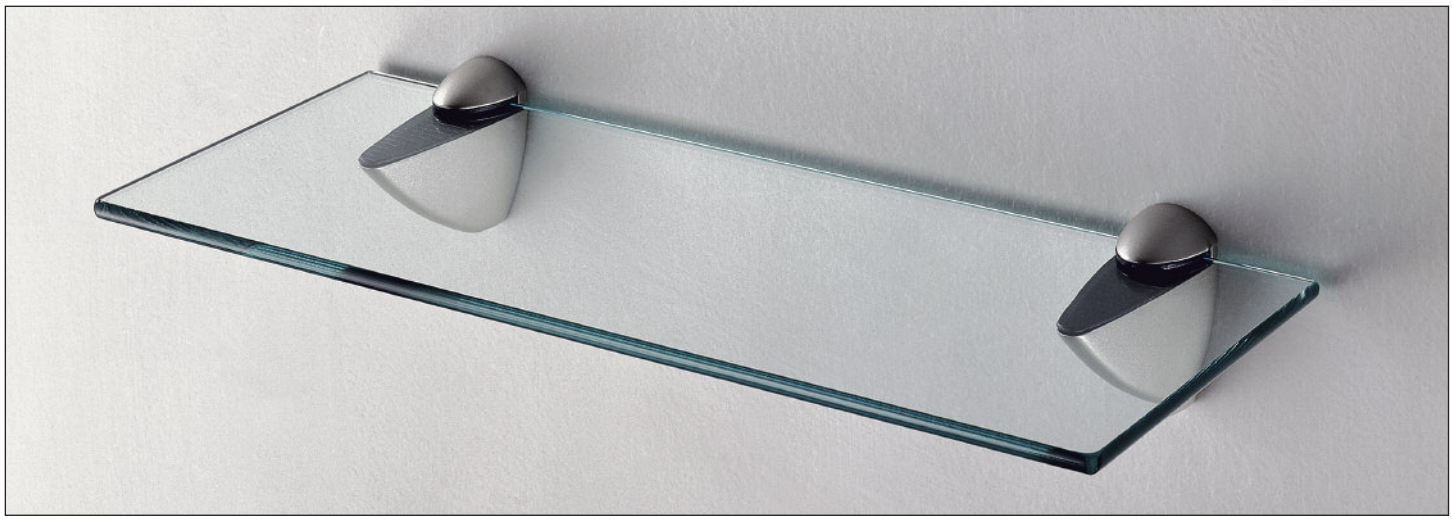

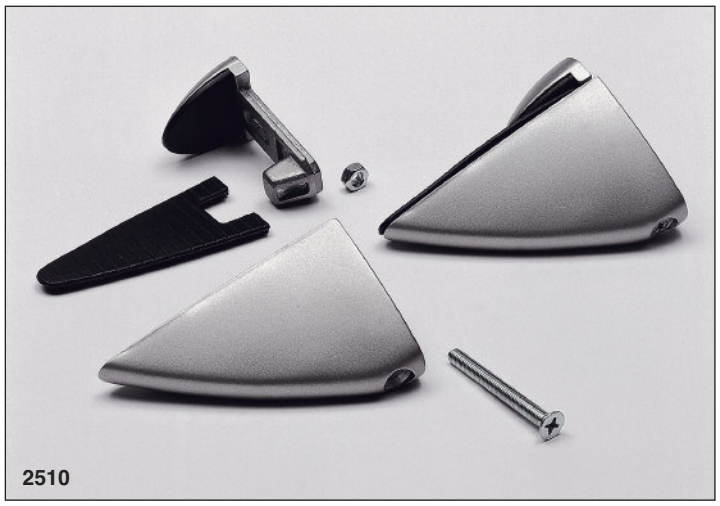

2510

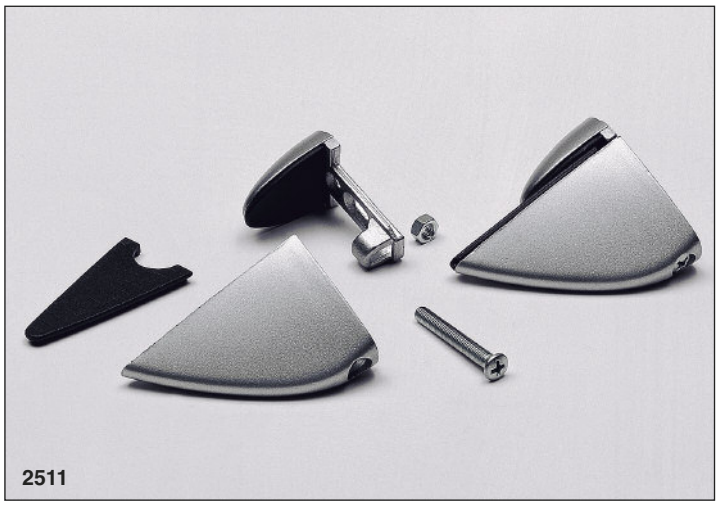

2511

ART. 2510

REGGIMENSOLE PER RIPIANI IN CRISTALLO E LEGNO CON SPESSORI DA 4mm A 30mm.
SHELF SUPPORT FOR SHELVES MADE OF CRYSTALL AND WOOD WITH THICKNESS FROM 4mm TO 30mm.
CONSOLE POUR CONSOLES CRISTAL ET BOIS AVEC ÉPAISSEUR DE 4mm À 30mm.
KONSOLESTUTZE FÜR KONSOLEN AUS KRISTALL UND HOLZ MIT DURCHMESSER VON 4mm BIS 30mm.

MATERIALE - MATERIAL - MATIÈRE - MATERIAL

Zama. - Zamak. - Zamac. - Zamak.

FINITURE - FINISHES - EXECUTIONS - AUSFUEHRUNGEN

Cromato, Ottonato, Bianco, Nero, Alluminio, Verniciato Satinato.
Chromed, Brassed, White, Black, Aluminium, Satin Finish Coating.
Chromé, Laitonné, Blanc, Noir, Aluminium, Peinture Satinée.
Verchromt, Vermessing, Weiss, Schwarz, Aluminium, Satiniert Lackiert.

DIMENSIONI REGGIMENSOLA - SHELVES' DIMENSIONS
DIMENSION DE CONSOLES - DIMENSION VON KONSOLEN

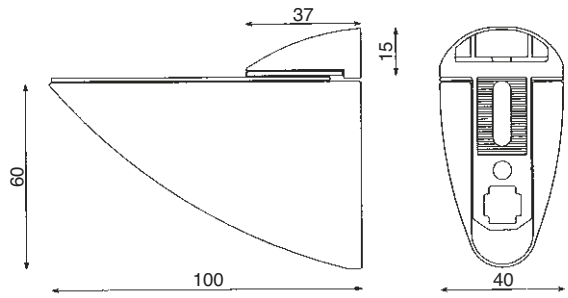

ART. 2511

REGGIMENSOLE PER RIPIANI IN CRISTALLO E LEGNO CON SPESSORI DA 4mm A 20mm.
SHELF SUPPORT FOR SHELVES MADE OF CRYSTALL AND WOOD WITH THICKNESS FROM 4mm TO 20mm.
CONSOLE POUR CONSOLES CRISTAL ET BOIS AVEC ÉPAISSEUR DE 4mm À 20mm.
KONSOLESTUTZE FÜR KONSOLEN AUS KRISTALL UND HOLZ MIT DURCHMESSER VON 4mm BIS 20mm.

MATERIALE - MATERIAL - MATIÈRE - MATERIAL

Zama. - Zamak. - Zamac. - Zamak.

FINITURE - FINISHES - EXECUTIONS - AUSFUEHRUNGEN

Cromato, Ottonato, Bianco, Nero, Alluminio, Verniciato Satinato.
Chromed, Brassed, White, Black, Aluminium, Satin Finish Coating.
Chromé, Laitonné, Blanc, Noir, Aluminium, Peinture Satinée.
Verchromt, Vermessing, Weiss, Schwarz, Aluminium, Satiniert Lackiert.

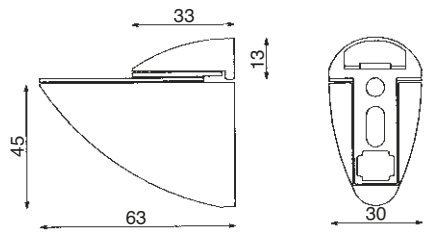

ART. 2512

REGGIMENSOLE PER RIPIANI IN CRISTALLO E LEGNO
CON SPESSORI DA 4mm A 30mm.
SHELF SUPPORT FOR SHELVES MADE OF CRYSTALL
AND WOOD WITH THICKNESS FROM 4mm TO 30mm.
CONSOLE POUR CONSOLES CRISTAL ET BOIS
AVEC ÉPAISSEUR DE 4mm À 30mm.
KONSOLESTUTZE FÜR KONSOLEN AUS KRISTALL
UND HOLZ MIT DURCHMESSER VON 4mm BIS 30mm.

MATERIALE - MATERIAL - MATIÈRE - MATERIAL

Zama.
Zamak.
Zamac.
Zamak.

FINITURE - FINISHES - EXECUTIONS - AUSFUEHRUNGEN

Cromato, Ottonato, Bianco, Nero, Alluminio, Verniciato Satinato.
Chromed, Brassed, White, Black, Aluminium, Satin Finish Coating.
Chromé, Laitonné, Blanc, Noir, Aluminium, Peinture Satinée.
Verchromt, Vermessing, Weiss, Schwarz, Aluminium, Satiniert Lackiert.

DIMENSIONI REGGIMENSOLA - SHELVES' DIMENSIONS
DIMENSION DE CONSOLES - DIMENSION VON KONSOLEN

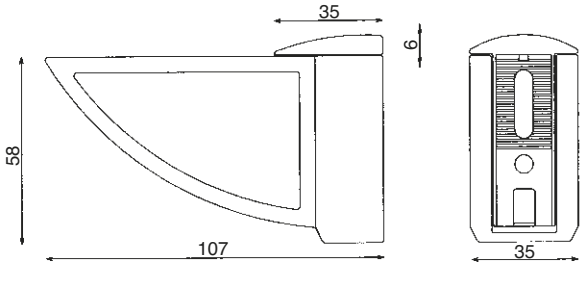

MANART srl - 23876 MONTICELLO - FRAZ. CORTENUOVA (LC) ITALY - Via T. Moneta, 17 - Tel. 039.920.35.55 - 039.920.26.44 - Fax 039.920.28.01
www.manart.it e-mail: manart@manart.it

ART. 2530-2531-2532

REGGIMENSOLA ROBUSTA PESANTE.
HEAVY DUTY SHELF BRACKET.
SUPPORTE DE TABLETTE ROBUSTE LOURD.
SCHWERLAST-STEGKONSOLE.

MATERIALE - MATERIAL - MATIÉRE - MATERIAL

Acciaio - Steel - Acier - Stahl.

FINITURE - FINISHES - EXECUTIONS - AUSFUEHRUNGEN

Verniciatura epossidica bianco - nero. Zincato bianco.
Epoxy paint white - black. Galvanised white.
Peinture époxyde blanc - noir. Blanc galvanisé
Epoxylackierung weiß - schwarz. Weiß verzinkt.

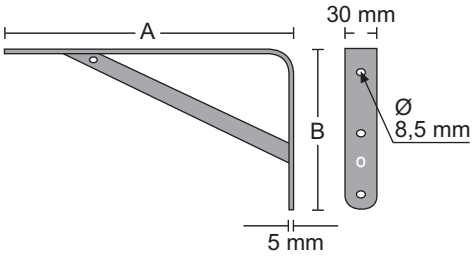

ART.	A mm	B mm
2530	300	200
2531	400	260
2532	500	320

ART. 2533-2534

ART. 2535-2536

REGGIMENSOLA RUSTICA.
RUSTIC SHELF BRACKET.
SUPPORT DE TABLETTE RUSTIQUE.
RUSTIKALE KONSOLE.

MATERIALE - MATERIAL - MATIÉRE - MATERIAL

Acciaio - Steel - Acier - Stahl.

FINITURE - FINISHES - EXECUTIONS - AUSFUEHRUNGEN

Verniciatura epossidica martellata: nero - argento - oro - ramato.
Hammer finish epoxy paint: black - silver - gold - copper.
Peinture époxyde: noir martelé- argent martelé- or martelé- cuivre martelé
Epoxylackierung Hammerschlag: Schwarz - silber - gold - kupfer.

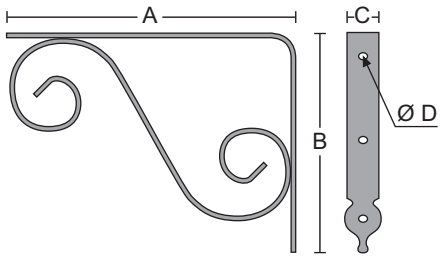

ART.	A mm	B mm	C mm	D mm Ø
2533	150	110	25	4,5
2534	200	150	25	4,5
2535	250	200	30	5,5
2536	300	250	30	5,5

ART. 2537-2538-2539

ART. 2540-2541

ART. 2542-2543

REGGIMENSOLA NERVATA.
UTILITY SHELF BRACKET.
SUPPORTE DE TABLETTE NERVURÉ.
VERSTÄRKTE METALLKONSOLE.

MATERIALE - MATERIAL - MATIÉRE - MATERIAL

Acciaio - Steel - Acier - Stahl.

FINITURE - FINISHES - EXECUTIONS - AUSFUEHRUNGEN

Verniciatura epossidica bianco - grigio.
Epoxy paint white - grey.
Peinture époxyde blanc - gris.
Epoxylackierung weiß - grau.

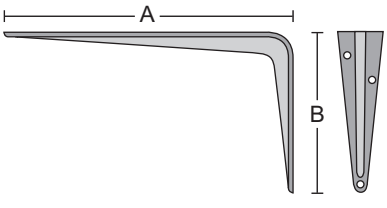

ART.	A mm	B mm
2537	100	75
2538	125	100
2539	150	125
2540	200	150
2541	250	200
2542	300	250
2543	350	300

MANART srl - 23876 MONTICELLO - FRAZ. CORTENUOVA (LC) ITALY - Via T. Moneta, 17 - Tel. 039.920.35.55 - 039.920.26.44 - Fax 039.920.28.01
www.manart.it e-mail: manart@manart.it

ART. 2513

REGGIMENSOLE PER RIPIANI IN CRISTALLO E LEGNO CON SPESSORI DA 0mm A 40mm.
SHELF SUPPORT FOR SHELVES MADE OF CRYSTALL AND WOOD WITH THICKNESS FROM 0mm TO 40mm.
CONSOLE POUR CONSOLES CRISTAL ET BOIS AVEC ÉPAISSEUR DE 0mm À 40mm.
KONSOLESTUTZE FÜR KONSOLEN AUS KRISTALL UND HOLZ MIT DURCHMESSER VON 0mm BIS 40mm.

MATERIALE - MATERIAL - MATIÈRE - MATERIAL

Zama - Zamak - Zamac - Zamak.

FINITURE - FINISHES - EXECUTIONS - AUSFUEHRUNGEN

Verniciatura epossidica tutti i colori. Nickel satinato - Alluminio - Cromato.
Epoxy painting every colour. Nickel satined - Aluminium - Chromed.
Peinture Epoxide chaque couleur. Nickel satiné - Aluminium - Chrome.
Epoxy Lackierung jeder Farbe. Nickel satiniert - Aluminium - Verchromt.

DIMENSIONI REGGIMENSOLA - SHELVES' DIMENSIONS
DIMENSION DE CONSOLES - DIMENSION VON KONSOLEN

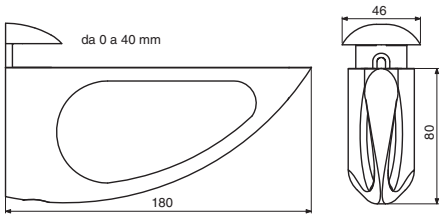

ART. 2515

REGGIMENSOLE PER RIPIANI IN CRISTALLO E LEGNO CON SPESSORI DA 0mm A 20mm.
SHELF SUPPORT FOR SHELVES MADE OF CRYSTALL AND WOOD WITH THICKNESS FROM 0mm TO 20mm.
CONSOLE POUR CONSOLES CRISTAL ET BOIS AVEC ÉPAISSEUR DE 0mm À 20mm.
KONSOLESTUTZE FÜR KONSOLEN AUS KRISTALL UND HOLZ MIT DURCHMESSER VON 0mm BIS 20mm.

MATERIALE - MATERIAL - MATIÈRE - MATERIAL

Zama - Zamak - Zamac - Zamak.

FINITURE - FINISHES - EXECUTIONS - AUSFUEHRUNGEN

Verniciatura epossidica tutti i colori. Alluminio - Cromato.
Epoxy painting every colour. Aluminium - Chromed.
Peinture Epoxide chaque couleur. Aluminium - Chrome.
Epoxy Lackierung jeder Farbe. Aluminium - Verchromt.

DIMENSIONI REGGIMENSOLA - SHELVES' DIMENSIONS
DIMENSION DE CONSOLES - DIMENSION VON KONSOLEN

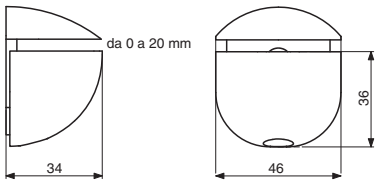

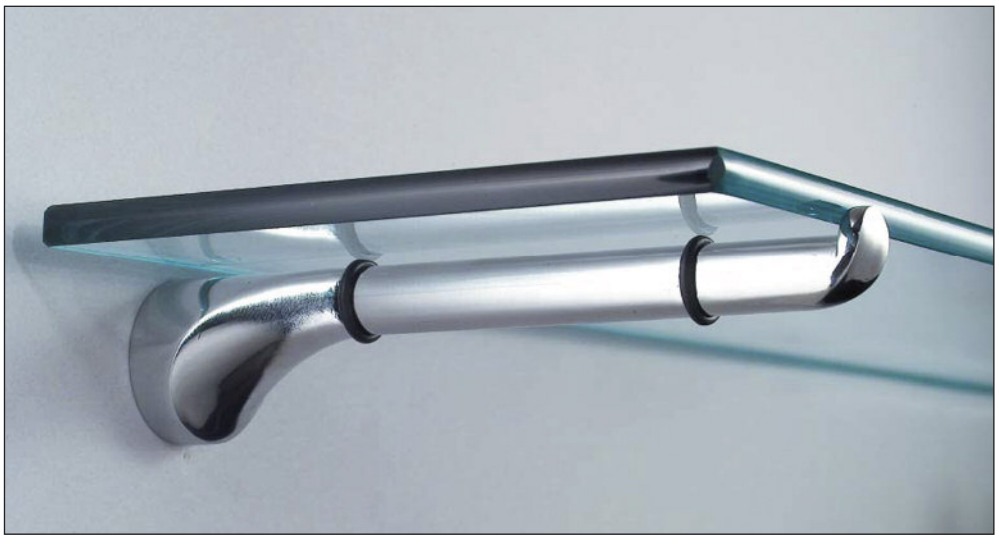

ART. 2516 150 mm

ART. 2517 200 mm

REGGIMENSOLE PER RIPIANI IN CRISTALLO E LEGNO DA 150mm O 200mm.
SHELF SUPPORT FOR SHELVES MADE OF CRYSTALL AND WOOD FROM 150mm OR 200mm.
CONSOLE POUR CONSOLES CRISTAL ET BOIS DE 150mm OU 200mm.
KONSOLESTUTZE FÜR KONSOLEN AUS KRISTALL UND HOLZ VON 150mm ODER 200mm.

MATERIALE - MATERIAL - MATIÈRE - MATERIAL

Zama - Zamak - Zamac - Zamak.

FINITURE - FINISHES - EXECUTIONS - AUSFUEHRUNGEN

Verniciatura epossidica tutti i colori. Alluminio - Cromato.
Epoxy painting every colour. Aluminium - Chromed.
Peinture Epoxide chaque couleur. Aluminium - Chrome.
Epoxy Lackierung jeder Farbe. Aluminium - Verchromt.

DIMENSIONI REGGIMENSOLA - SHELVES' DIMENSIONS
DIMENSION DE CONSOLES - DIMENSION VON KONSOLEN

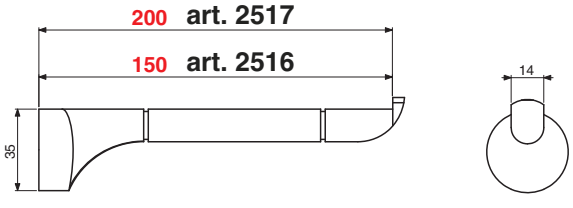

ART. 2518

REGGIMENSOLE PER RIPIANI IN CRISTALLO E LEGNO DA 0 A 10 mm.
SHELF SUPPORT FOR SHELVES MADE OF CRYSTALL AND WOOD FROM 0 TO 10 mm.
CONSOLE POUR CONSOLES CRISTAL ET BOIS DE 0 OU 10 mm.
KONSOLESTUTZE FÜR KONSOLEN AUS KRISTALL UND HOLZ VON 0 ODER 10 mm.

MATERIALE - MATERIAL - MATIÈRE - MATERIAL

Zama - Zamak - Zamac - Zamak.

FINITURE - FINISHES - EXECUTIONS - AUSFUEHRUNGEN

Verniciatura epossidica tutti i colori. Alluminio - Cromato.
Epoxy painting every colour. Aluminium - Chromed.
Peinture Epoxide chaque couleur. Aluminium - Chrome.
Epoxy Lackierung jeder Farbe. Aluminium - Verchromt.

DIMENSIONI REGGIMENSOLA - SHELVES' DIMENSIONS
DIMENSION DE CONSOLES - DIMENSION VON KONSOLEN

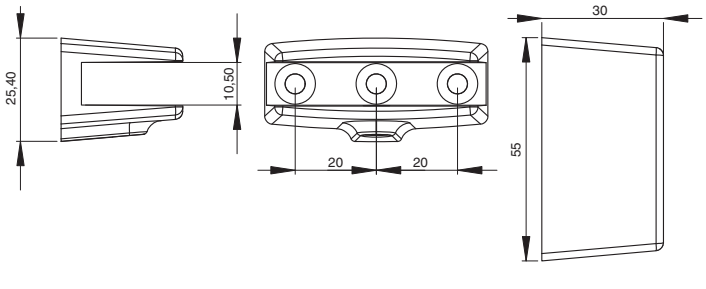

MANART srl - 23876 MONTICELLO - FRAZ. CORTENUOVA (LC) ITALY - Via T. Moneta, 17 - Tel. 039.920.35.55 - 039.920.26.44 - Fax 039.920.28.01
www.manart.it e-mail: manart@manart.it

ART. 2525 sp. 6 mm

ART. 2526 sp. 8 mm

ART. 2527 sp. 10 mm

REGGIMENSOLE PER RIPIANI IN CRISTALLO E LEGNO CON SPESSORI DA 0mm A 6-8-10mm.
SHELF SUPPORT FOR SHELVES MADE OF CRYSTALL AND WOOD WITH THICKNESS FROM 0mm TO 6-8-10mm.
CONSOLE POUR CONSOLES CRISTAL ET BOIS AVEC ÉPAISSEUR DE 0mm À 6-8-10mm.
KONSOLESTUTZE FÜR KONSOLEN AUS KRISTALL UND HOLZ MIT DURCHMESSER VON 0mm BIS 6-8-10mm.

MATERIALE - MATERIAL - MATIÈRE - MATERIAL

Zama - Zamak - Zamac - Zamak.

FINITURE - FINISHES - EXECUTIONS - AUSFUEHRUNGEN

Verniciatura epossidica tutti i colori. Alluminio - Cromato - Ottonato.
Epoxy painting every colour. Aluminium - Chromed - Brassed.
Peinture Epoxide chaque couleur. Aluminium - Chrome - Laitonné.
Epoxy Lackierung jeder Farbe. Aluminium - Verchromt - Vermessingt.

DIMENSIONI REGGIMENSOLA - SHELVES' DIMENSIONS
DIMENSION DE CONSOLES - DIMENSION VON KONSOLEN

art. 2525

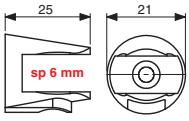

art. 2526

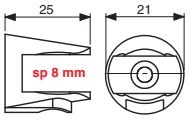

art. 2527

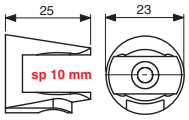

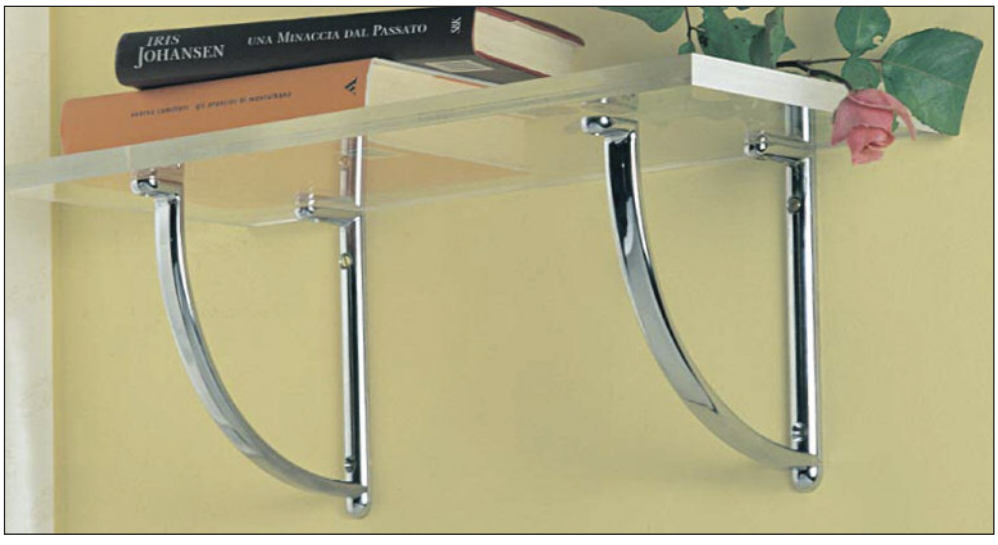

ART. 2528

REGGIMENSOLE PER RIPIANI IN CRISTALLO E LEGNO
SHELF SUPPORT FOR SHELVES MADE OF CRYSTALL AND WOOD
CONSOLE POUR CONSOLES CRISTAL ET BOIS
KONSOLESTUTZE FÜR KONSOLEN AUS KRISTALL UND HOLZ

MATERIALE - MATERIAL - MATIÈRE - MATERIAL

Zama - Zamak - Zamac - Zamak.

FINITURE - FINISHES - EXECUTIONS - AUSFUEHRUNGEN

Verniciatura epossidica tutti i colori. Alluminio - Cromato.
Epoxy painting every colour. Aluminium - Chromed.
Peinture Epoxide chaque couleur. Aluminium - Chrome.
Epoxy Lackierung jeder Farbe. Aluminium - Verchromt.

DIMENSIONI REGGIMENSOLA - SHELVES' DIMENSIONS
DIMENSION DE CONSOLES - DIMENSION VON KONSOLEN

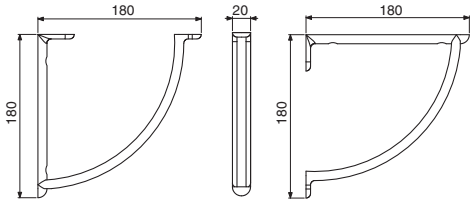

ART. 2529

REGGIMENSOLE PER RIPIANI IN CRISTALLO E LEGNO
SHELF SUPPORT FOR SHELVES MADE OF CRYSTALL AND WOOD
CONSOLE POUR CONSOLES CRISTAL ET BOIS
KONSOLESTUTZE FÜR KONSOLEN AUS KRISTALL UND HOLZ

MATERIALE - MATERIAL - MATIÈRE - MATERIAL

Zama - Zamak - Zamac - Zamak.

FINITURE - FINISHES - EXECUTIONS - AUSFUEHRUNGEN

Verniciatura epossidica tutti i colori. Alluminio - Cromato.
Epoxy painting every colour. Aluminium - Chromed.
Peinture Epoxide chaque couleur. Aluminium - Chrome.
Epoxy Lackierung jeder Farbe. Aluminium - Verchromt.

DIMENSIONI REGGIMENSOLA - SHELVES' DIMENSIONS
DIMENSION DE CONSOLES - DIMENSION VON KONSOLEN

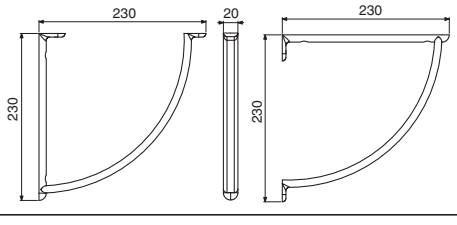

MANART srl - 23876 MONTICELLO - FRAZ. CORTENUOVA (LC) ITALY - Via T. Moneta, 17 - Tel. 039.920.35.55 - 039.920.26.44 - Fax 039.920.28.01
www.manart.it e-mail: manart@manart.it

ART. 2600

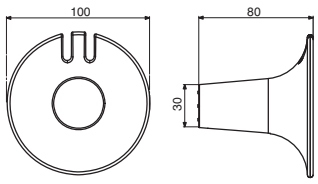

Appendiabiti
Coat hangers
Portemanteau
Kleiderstaender

MATERIALE - MATERIAL - MATIÉRE - MATERIAL

Zama - Zamak - Zamac - Zamak.

FINITURE - FINISHES - EXECUTIONS - AUSFUEHAUNGEN

Verniciatura epossidica: alluminio - bianco - cromato, altre a richiesta.
Epoxy painting: aluminium - white - chromed, other on demand.
Peinture Epoxide: aluminium - blanc - chrome, autres sur demande.
Epoxy Lackierung: Aluminium - Weiß - Verchromt, andere auf Anfrage.

ART. 2601

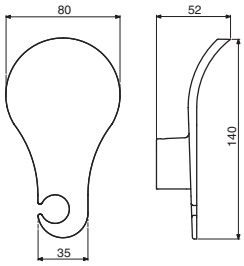

Appendiabiti
Coat hangers
Portemanteau
Kleiderstaender

MATERIALE - MATERIAL - MATIÉRE - MATERIAL

Zama - Zamak - Zamac - Zamak.

FINITURE - FINISHES - EXECUTIONS - AUSFUEHAUNGEN

Verniciatura epossidica: alluminio - bianco - cromato, altre a richiesta.
Epoxy painting: aluminium - white - chromed, other on demand.
Peinture Epoxide: aluminium - blanc - chrome, autres sur demande.
Epoxy Lackierung: Aluminium - Weiß - Verchromt, andere auf Anfrage.

ART. 2602

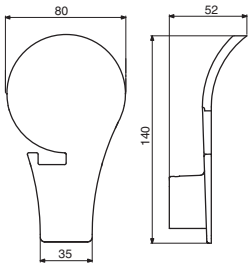

Appendiabiti
Coat hangers
Portemanteau
Kleiderstaender

MATERIALE - MATERIAL - MATIÉRE - MATERIAL

Zama - Zamak - Zamac - Zamak.

FINITURE - FINISHES - EXECUTIONS - AUSFUEHAUNGEN

Verniciatura epossidica: alluminio - bianco - cromato, altre a richiesta.
Epoxy painting: aluminium - white - chromed, other on demand.
Peinture Epoxide: aluminium - blanc - chrome, autres sur demande.
Epoxy Lackierung: Aluminium - Weiß - Verchromt, andere auf Anfrage.

ART. 2603

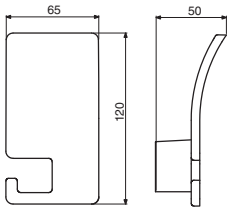

Appendiabiti
Coat hangers
Portemanteau
Kleiderstaender

MATERIALE - MATERIAL - MATIÉRE - MATERIAL

Zama - Zamak - Zamac - Zamak.

FINITURE - FINISHES - EXECUTIONS - AUSFUEHAUNGEN

Verniciatura epossidica: alluminio - bianco - cromato, altre a richiesta.
Epoxy painting: aluminium - white - chromed, other on demand.
Peinture Epoxide: aluminium - blanc - chrome, autres sur demande.
Epoxy Lackierung: Aluminium - Weiß - Verchromt, andere auf Anfrage.

ART. 2520

SUPPORTO SNACK DA FISSARE SUL PIANO DI LAVORO
BEARING FOR SNACK TO BE FIXED ON A WORK-TOP
SUPPORT POUR SNACK À FIXER SUR LE PLAN DE TRAVAIL
AUFLAGE FÜR IMBIß AUF EINEM WERKBRETT ZU BEFESTIGEN

MATERIALE - MATERIAL - MATIÉRE - MATERIAL

Alluminio.
Aluminium.
Aluminium.
Aluminium.

FINITURE - FINISHES - EXECUTIONS - AUSFUEHRUNGEN

Alluminio, Verniciato Satinato, Nero, Bianco.
Aluminium, Satin Finish Coating, Black, White varnished.
Aluminium, Peinture Satinée, Noir, Blanc.
Aluminium, Satiniert Lackiert, Schwarz, Weiss.

ALLUMINIO ALUMINIUM ALUMINIUM ALUMINIUM	VERNICIATO SATINATO SATIN FINISH COATING PEINTURE SATINÉE SATINIERT LACKIERT	NERO BLACK NOIR SCHWARZ	BIANCO WHITE BLANC WEISS **RAL 9003**

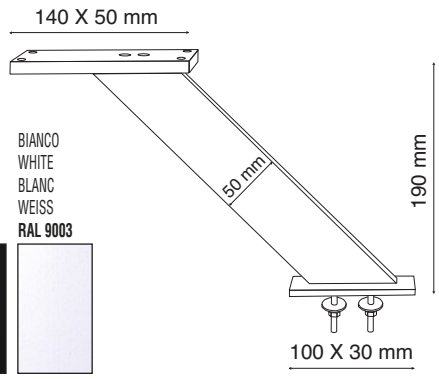

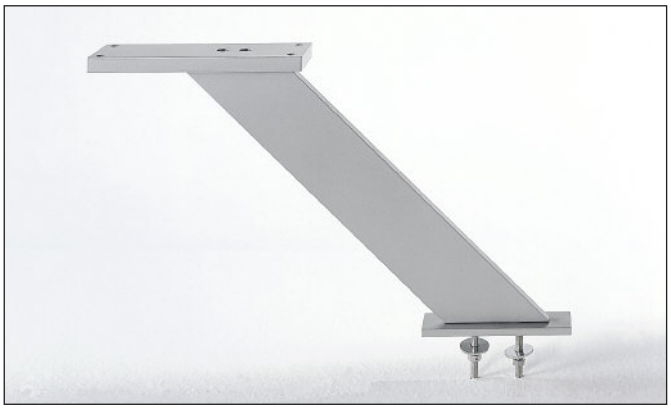

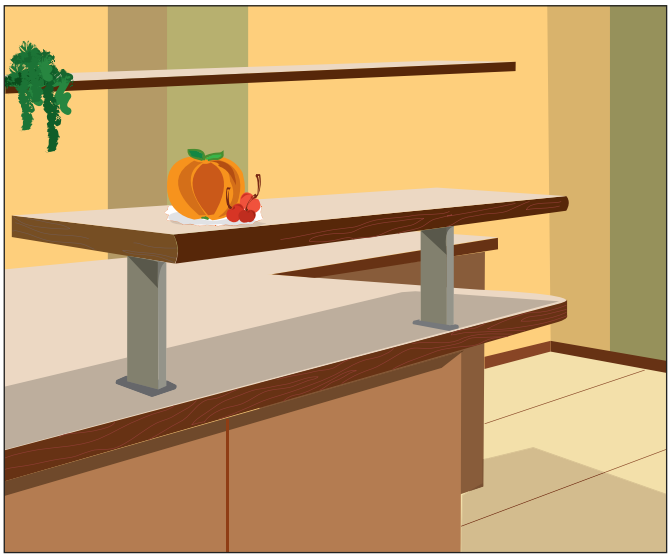

ART. 2521

SUPPORTO SNACK DA FISSARE SUL PIANO DI LAVORO
BEARING FOR SNACK TO BE FIXED ON A WORK-TOP
SUPPORT POUR SNACK À FIXER SUR LE PLAN DE TRAVAIL
AUFLAGE FÜR IMBIß AUF EINEM WERKBRETT ZU BEFESTIGEN

MATERIALE - MATERIAL - MATIÉRE - MATERIAL

Alluminio.
Aluminium.
Aluminium.
Aluminium.

FINITURE - FINISHES - EXECUTIONS - AUSFUEHRUNGEN

Alluminio, Verniciato Satinato, Nero, Bianco.
Aluminium, Satin Finish Coating, Black, White varnished.
Aluminium, Peinture Satinée, Noir, Blanc.
Aluminium, Satiniert Lackiert, Schwarz, Weiss.

ALLUMINIO ALUMINIUM ALUMINIUM ALUMINIUM	VERNICIATO SATINATO SATIN FINISH COATING PEINTURE SATINÉE SATINIERT LACKIERT	NERO BLACK NOIR SCHWARZ	BIANCO WHITE BLANC WEISS **RAL 9003**

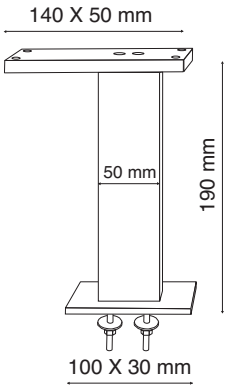

MANART

23876 MONTICELLO - Fraz. Cortenuova (LC) ITALY
Via T. Moneta, 17 - Tel. 039.920.35.55 - 039.920.26.44
Fax 039.920.28.01 - e-mail: manart@manart.it
www.manart.it

5 cremagliera

tubi tondi e quadri con accessori per scaffalature

MANART

Sistema cremagliera
Rack system - Système crémaillère

4302: L 2400 mm

solo per / only for
seulement pour
4312 - 4243 - 4247
4248 - 4240 - 4246
4245A - 4299

finitura

CR

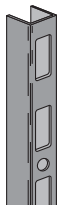

Montante asolato passo 50 mm.
Slotted pillar - step 50 mm.
Montant à boutonniéres pas 50 mm.

4312

colori
Wenghè/Wenge/Wengé
Ciliegio/Cherry/Cerisier
Faggio/Beech/Hetre
Alluminio/Aluminium
Olmojerez
Bianco lucido/
Glossy white/Blanc brillant
Nero lucido/
Glossy black/Noir brillant

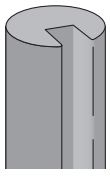

Decoro in legno per art. 4302.
Wooden finishing for ref. 4302.
Element décoratif en bois pour art. 4302.

4202: L 2400 mm

finitura

CR

Montante asolato passo 50 mm.
Slotted pillar - step 50 mm.
Montant à boutonniéres pas 50 mm.

4212

colori
Wenghè/Wenge/Wengé
Ciliegio/Cherry/Cerisier
Faggio/Beech/Hetre
Alluminio/Aluminium
Olmojerez
Bianco lucido/
Glossy white/Blanc brillant
Nero lucido/
Glossy black/Noir brillant

Decoro in legno per art. 4202.
Wooden finishing for ref. 4202.
Element décoratif en bois pour art. 4202.

4401: L 2000 mm

solo per / only for
seulement pour
4243 - 4247 - 4248 - 4240
4246 - 4245A - 4299

finitura

CR

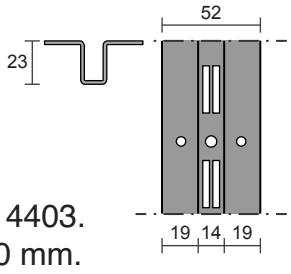

Profilo in lamiera con
doppia asola, passo 50 mm. per articolo 4403.
Metal profile with double slot, pitch 50 mm. for item 4403.
Crémaillère en acier avec double rainure, pas de 50 mm.
pour l'article 4403.

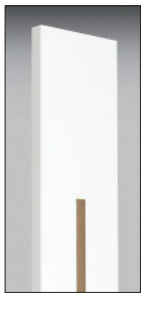

4403: L 2400 mm

colori
Wenghè/Wenge/Wengé
Alluminio/Aluminium
Olmojerez
Bianco lucido/
Glossy white/Blanc brillant
Nero lucido/
Glossy black/Noir brillant

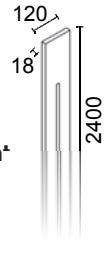

Decoro in legno per art. 4401.
Wooden finishing for art. 4401.
Décor ton bois pour art. 4401.

4402: L 2400 mm

solo per / only for
seulement pour
4243 - 4247 - 4248 - 4240
4246 - 4245A - 4299

finitura
CR

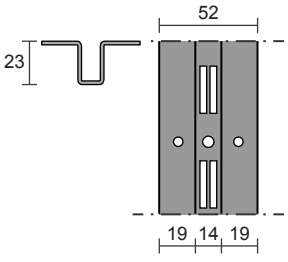

Profilo in lamiera con doppia asola, passo 50 mm.
Metal profile with double slot, pitch 50 mm.
Crémaillère en acier avec double rainure, pas de 50 mm.

4404: L 2400 mm

solo per / only for
seulement pour
4243 - 4247 - 4248
4240 - 4246 - 4245A
4299

finitura
CR

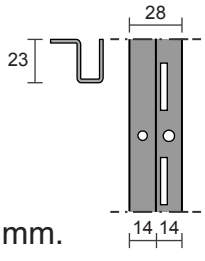

Profilo in lamiera con asola singola,
elemento terminale. Passo 50 mm.
Metal profile with single slot, terminal element. Pitch 50 mm.
Crémaillère en acier avec rainure unique. Pas de 50 mm.

4405

solo per / only for
seulement pour
4402 - 4404

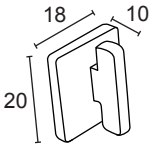

Ferma pannello in plastica trasparente.
Panel fastening system (transparent plastic).
Arrête panneau (plastique transparent).

4243 DX/SX: L 370 mm

finitura
CR

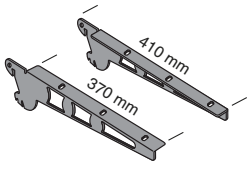

Mensola a sbalzo diritta e inclinabile a 2 denti L = 370 mm.
Straight and tiltable overhanging two-teeth bracket L = 370 mm.
Console droite et inclinable à deux ergots en saillie L = 370 mm.

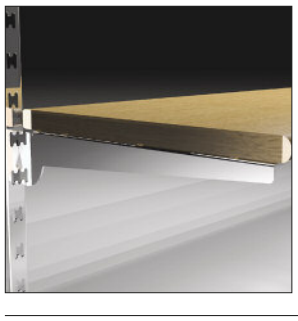

4247 DX/SX: L 240 mm

finitura
CR

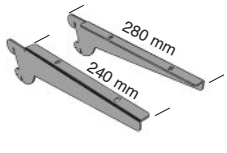

Mensola a sbalzo diritta e inclinabile a 2 denti L = 240 mm.
Straight and tiltable overhanging two-teeth bracket L = 240 mm.
Console droite et inclinable à deux ergots en saillie L = 240 mm.

4248 DX//SX: L 370 mm

finitura
CR

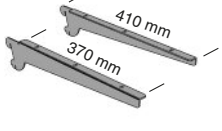

Mensola a sbalzo diritta e inclinata a 2 denti L = 370 mm.
Straight and inclined overhanging two-teeth bracket L = 370 mm.
Console droite ou inclinée à deux ergots en saillie L = 370 mm.

4299: L 240 mm

finitura

CR

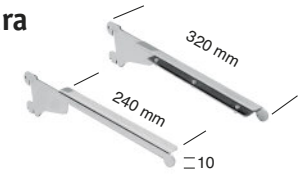

Coppia supporti per ripiani in cristallo con fermo.
Glass shelf support (pair) with stopper.
Support pour étagère (couple) avec fermeture.

4240: L 900 mm

finitura

CR

Appendiabiti diritto.
Straight clothes rail.
Barre pour vêtement droite.

4246: L 900 mm

solo per / only for
seulement pour
4054B - 4055B - 4057B
4058D - 4060

finitura

CR

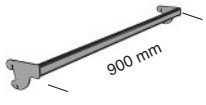

Traversa per attacco bracci espositori frontali.
Traverse for front exhibiting arms support.
Traverse pour le fixage de bras exposants frontaux.

4260B tubo ovale - L 380 mm

solo per / only for
seulement pour
4202

finitura

CR

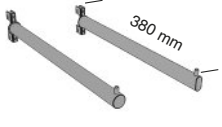

Braccio espositivo diritto.
Straight exhibiting arm.
Bras exposant droit.

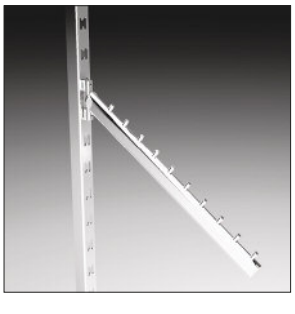

4262B tubo ovale

solo per / only for
seulement pour
4202

finitura

CR

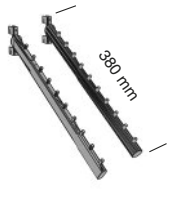

Braccio espositivo inclinato.
Inclined exhibiting arm.
Bras exposant incliné.

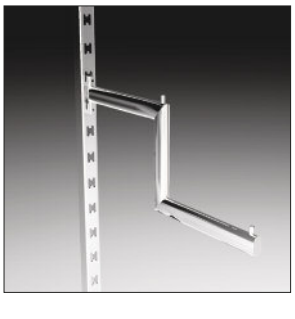

4264B tubo ovale

solo per / only for
seulement pour
4202

finitura

CR

Braccio espositivo a “Z”.
“Z” exhibiting arm.
Bras exposant à “Z”.

4245A DX/SX

finitura

CR

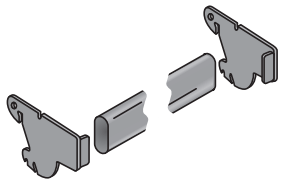

Coppia supporti per traversa con tubo ovale 30x15 mm.
Pair of supports for crosspiece with 30x15 mm oval tube.
Paire de supports pour traverse avec tube ovale 30x15 mm.

4054B: L 380 mm

finitura

CR

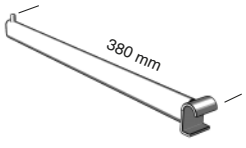

Braccio espositivo diritto tubo ovale 30x15 mm.
Straight exhibiting arm tube oval 30x15 mm.
Bras exposant droit tube ovale 30x15 mm.

4055B: L 380 mm

finitura

CR

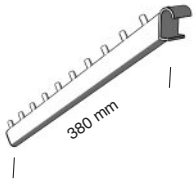

Braccio espositivo inclinato tubo ovale 30x15 mm.
Inclined exhibiting arm tube oval 30x15 mm.
Bras exposant incliné tube ovale 30x15 mm.

4057B: L 380 mm

finitura

CR

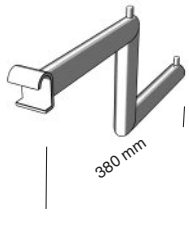

Braccio espositivo a “Z” ovale 30x15 mm.
“Z” exhibiting arm tube oval 30x15 mm.
Bras exposant à “Z” tube ovale 30x15 mm.

4058D: L 380 mm

solo per / only for
seulement pour
4246

finitura

CR

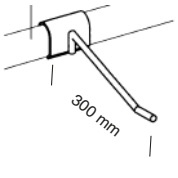

Gancio porta blister con attacco a tubo ovale 30x15 mm.
Blister holder hook with 30x15 mm oval tube fixing.
Crochet porte-blister avec fixation à tube ovale 30x15 mm.

4060

solo per / only for
seulement pour
4246

finitura

CR

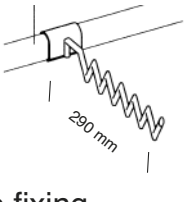

Supporto espositore inclinato a cremagliera con attacco a tubo ovale 30x15 mm.
Inclined exhibiting rack support with 30x15 mm oval tube fixing.
Support exposant incliné à crémaillère avec fixation à tube ovale 30x15 mm.

Wenghè Wenge Wengé	Ciliegio Cherry Cerisier	Faggio Beech Hetre	Alluminio Aluminium Aluminium	Olmojerez Olmojerez Olmojerez	Bianco lucido Glossy white Blanc brillant	RAL 9005 Nero lucido Glossy black Noir brillant

finitura

CR cromato
chromium-plated
chromé

I colori dei campioni hanno valore puramente indicativo.
Sample colours are meant as a guide only.
Die Musterfarben dienen ausschließlich zur Darstellung.
Les coloris des échantillons n'ont qu'une valeur indicative.

MANART s.r.l.
23876 MONTICELLO - FRAZ. CORTENUOVA (LC) ITALY
Via T. Moneta, 17 - Tel. 039.920.35.55 - 039.920.26.44
Fax 039.920.28.01 www.manart.it e-mail: manart@manart.it

Timbro del rivenditore - Dealer's stamp - Händlerstempel
Timbre du revendeur

li o là

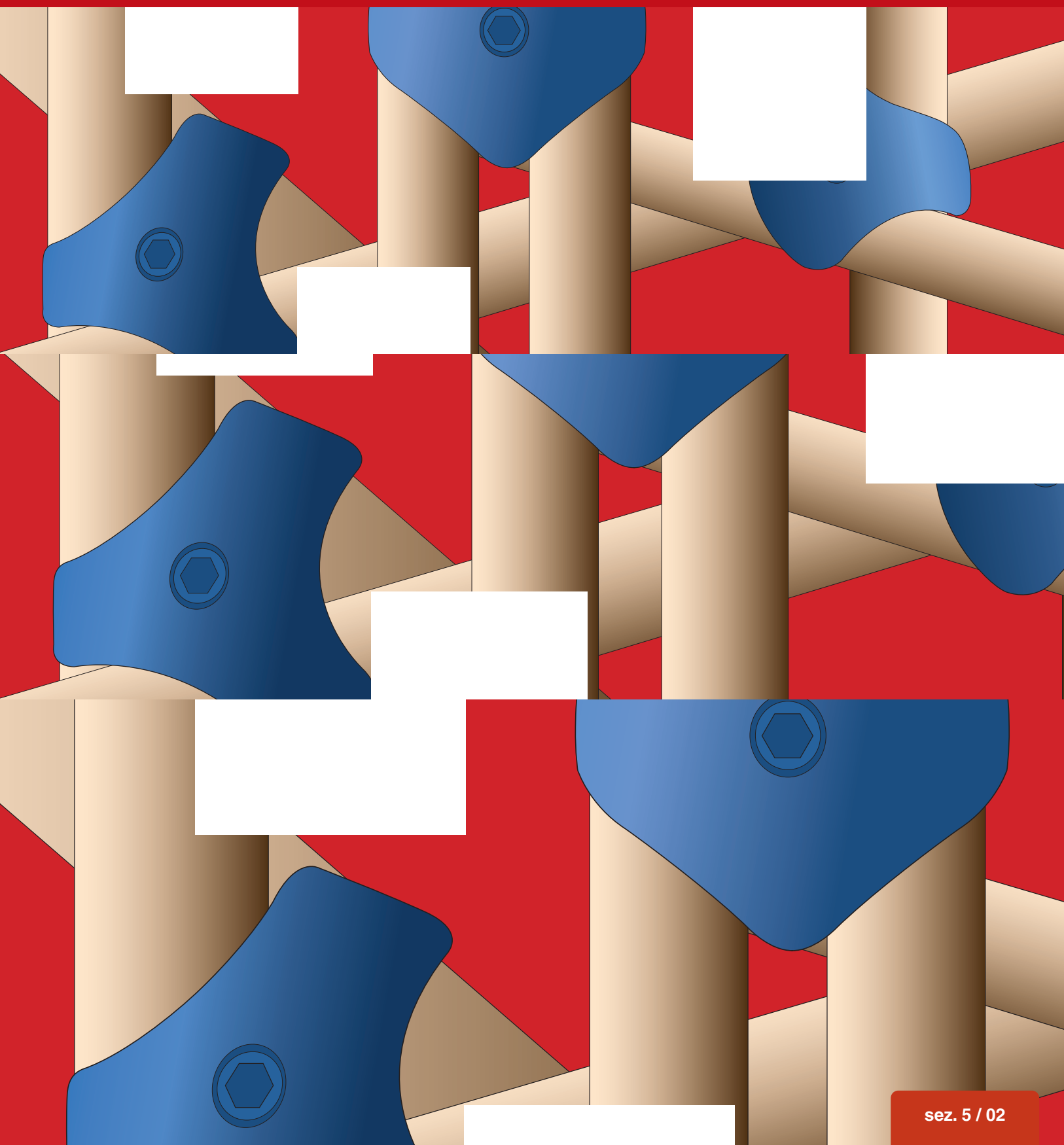

art.400

Tubo Ø 25 mm x 1.2 x 3mt.
Tube Ø 25mm x 1.2 x 3m.
Rohr Ø 25mm x 1.2 x 3m.
Tube Ø 25 mm x 1.2 x 3m.

finitura

V CR OT

colori

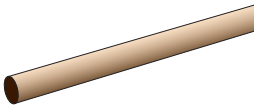

art.401 DX
art.402 SX

Giunto a 3 vie.
3 ways - joint.
3 Wege - Verbindung.
Joint - 3 voies.

finitura

V CR OT

colori

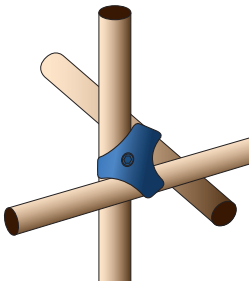

art.403 DX
art.404 SX

Giunto a 2 vie.
2 ways - joint.
2 Wege - Verbindung.
Joint - 2 voies.

finitura

V CR OT

colori

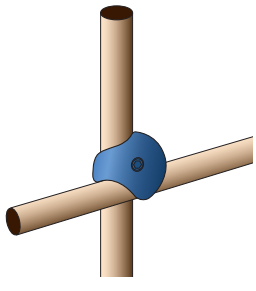

art.405

Giunto parallelo.
Parallel joint.
Parallele Verbindung.
Joint parallele.

finitura

V CR OT

colori

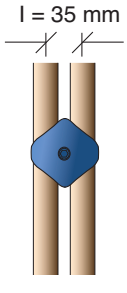

art.406

Giunto per cristallo - Sp. 8mm.
Joint for plate glass - Thickness 8mm.
Verbindung für Kristallglas - Dicke 8mm.
Joint pour cristal - Epaisseur 8mm.

finitura

V CR OT

colori

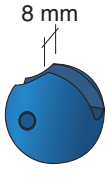

Schemi di montaggio

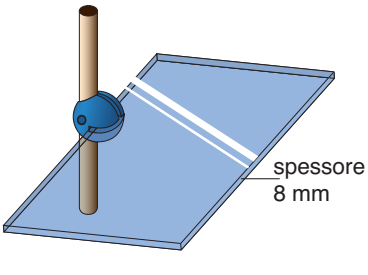

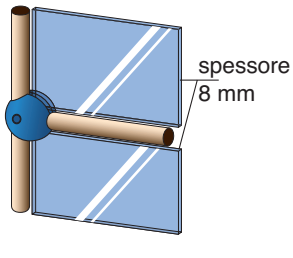

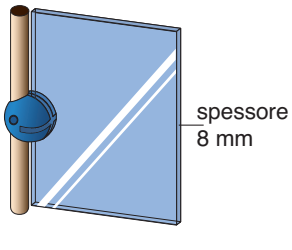

art.407

Giunto parallelo triplo.
Triple parallel joint.
Dreifache parallele Verbindung.
Joint triple parallele.

finitura
V CR OT

colori

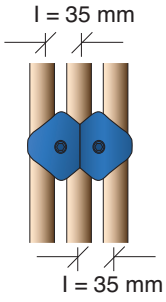

art.408

Giunto a 3 vie «T».
3 ways «T» joint.
3 Wege «T» Verbindung.
Joint 3 voies «T».

finitura
V CR OT

colori

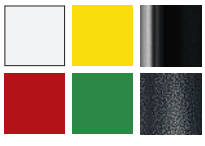

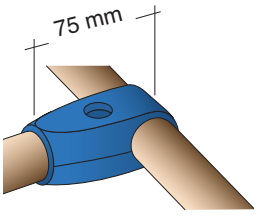

art.409

Giunto snodato a 4 vie.
4-way articulated joint.
4-Wege Verbindungsgelenk.
Raccord à rotule à 4 voies.

finitura
V CR OT

colori

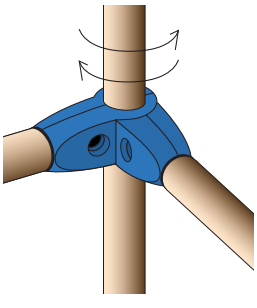

art.410

Giunto a 5 vie.
5 ways joint.
5 Wege Verbindung.
Joint 5 voies.

finitura
V CR OT

colori

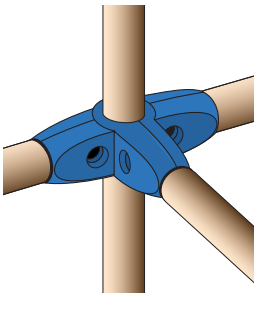

art.411

Giunto a 6 vie.
6 ways joint.
6 Wege Verbindung.
Joint 6 voies.

finitura
V CR OT

colori

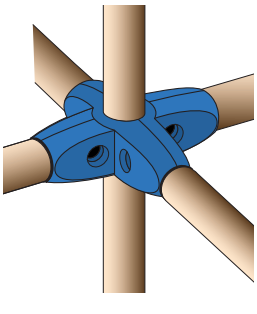

art.412

Giunto a 4 vie rettilineo.
4 ways rectilinear joint.
4 Wege geradlinige Verbindung.
Joint rectiligne 4 voies.

finitura
V CR OT

colori

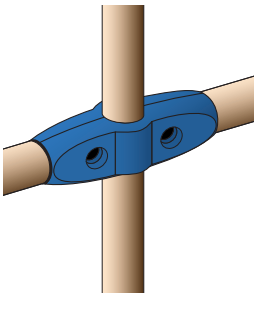

art.413

Giunto piatto, tubo/pannello.
Flat joint, tube/panneau.
Flache Verbindung, Rohr/Paneel.
Joint plat, tube/panneau.

finitura

V CR OT

colori

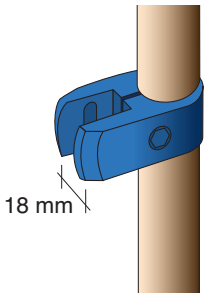

art.414

Giunto piatto, pannello/tubo/pannello.
Flat joint, panneau/tube/panneau.
Flache Verbindung, Paneel/Rohr/Paneel.
Joint plat, panneau/tube/panneau.

finitura

V CR OT

colori

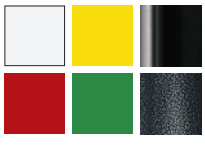

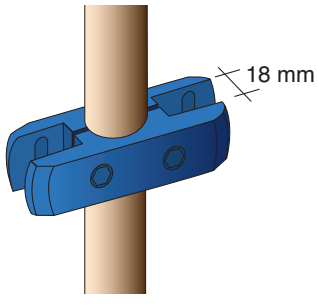

art.415

Giunto snodato piatto, pannello/tubo/pannello.
Flat articulated joint, panneau/tube/panneau.
Flache Gelenkverbindung, Paneel/Rohr/Paneel.
Joint plat articulé, panneau/tube/panneau.

finitura

V CR OT

colori

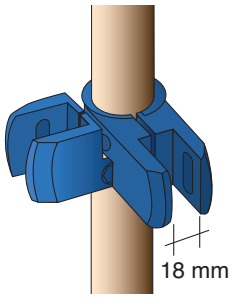

art.416

Giunto tubo/pannello o cristallo.
Joint for tube/panel or tube/glass.
Verbindung für Rohr/Paneel oder Rohr/Glas.
Joint tube/panneau ou tube/cristal.

finitura

V CR OT

colori

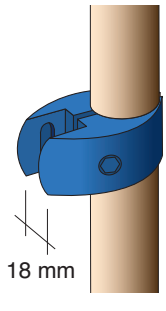

art.417

Inserto riduttore in plastica per pannello in legno o cristallo adatto per art. 413-414-415-416.
Plastic reduction insert for wood or glass panel suitable for art. 413-414-415-416.
Reduziereinsatz aus Kunststoff für Holz- oder Glaspaneelen, passend für Art. 413-414-415-416.
Insert de réduction en plastique pour panneau en bois ou en verre adapté pour les art. 413-414-415-416.

colori

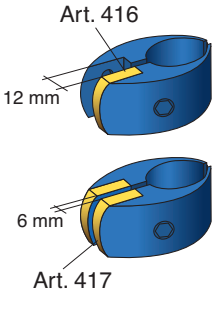

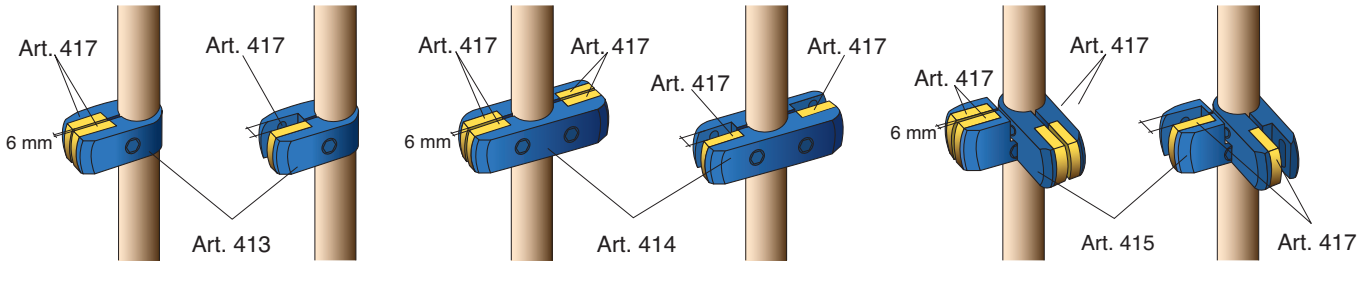

art.418

Giunto orientabile doppio.
Double-rolling joint.
Doppelter Drehverbinder.
Joint double tournant.

finitura
V CR OT

colori

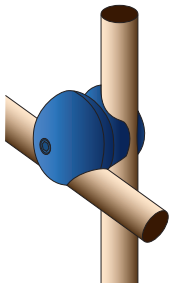

art.419

Giunto orientabile triplo.
Triple-rolling joint.
Dreifacher Drehverbinder.
Joint triple tournant.

finitura
V CR OT

colori

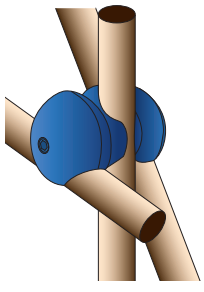

art.420

Giunto parallelo piatto (adatto per art. 421-422-423).
Flat parallel joint (also with art. 421-422-423).
Flache parallele Verbindung (auche mit Art. 421-422-423).
Joint parallele plate (aussi avec art. 421-422-423).

finitura
V CR OT

colori

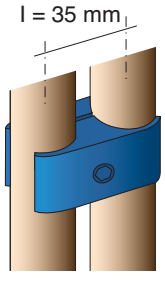

art.421 6mm

Inserto riduttore in plastica per pannello in legno o cristallo con art. 420.
Plastic reducer insert for wooden or glass panel with art. 420.
Einsatz aus Kunststoff für Holz-oder Kristallglaspaneel mit Art. 420.
Réducteur en plastique pour panneau en bois ou cristal avec art. 420.

colori

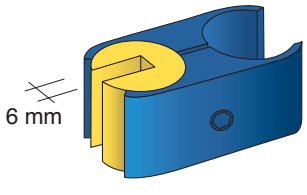

art.422 12mm

Inserto riduttore in plastica per pannello in legno o cristallo con art. 420.
Plastic reducer insert for wooden or glass panel with art. 420.
Einsatz aus Kunststoff für Holz-oder Kristallglaspaneel mit Art 420.
Réducteur en plastique pour panneau en bois ou cristal avec art. 420.

colori

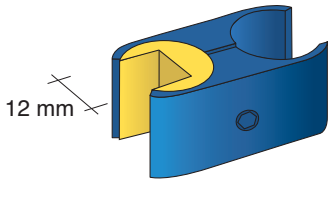

art.423

Inserto riduttore in plastica per griglia con art. 420.
Plastic reducer insert for grill with art. 420.
Einsatz aus Kunststoff für Gitter mit Art 420.
Réducteur en plastique pour grille avec art. 420.

colori

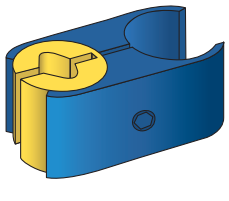

art.424

Giunto a snodo.
Articulated joint.
Verbindungsgelenk.
Joint à rotule.

finitura
V CR OT

colori

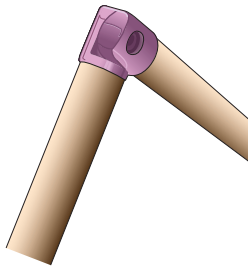

art.425 1050mm

Portaripiano angolare.
Angular shelf support.
Eckplattenträger.
Support angulaire pour étagère.

finitura
V CR OT

colori

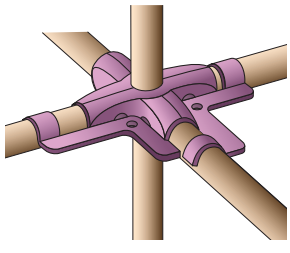

art.426

Supporto ripiani in orizzontale.
Horizontal shelf support.
Horizontaler Regalbretthalter.
Support pour panneaux horizontal.

finitura
V CR OT

colori

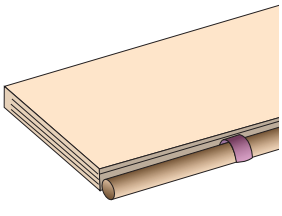

art.427

Supporto ripiani in verticale.
Vertical shelf support.
Vertikaler Regalbretthalter.
Support pour panneaux vertical.

finitura
V CR OT

colori

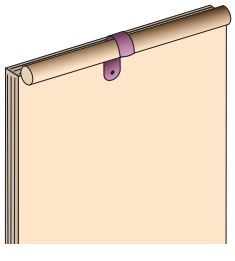

art.428

Mensola portaripiano diritta.
Straight shelf bracket.
Gerader Konsolträger.
Console pour étagères droite.

finitura
V CR

colori

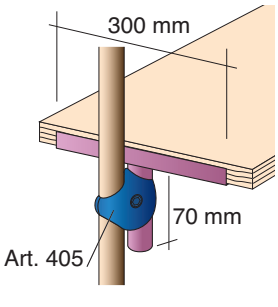

art.429DX
art.430SX

Mensola portaripiano inclinata.
Tilted shelf bracket.
Geneigter Konsolenträger.
Console pour étagère inclinée.

finitura
V CR

colori

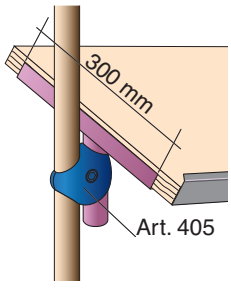

art.431

Supporto ripiani legno o vetro tipo semplice.
Simple support for wooden or glass shelves.
Einfacher Fachbodenträger.
Support simple pour étagères en bois or verre.

finitura
V CR

colori

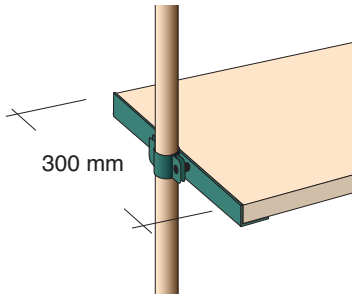

art.432

Supporto ripiani legno o vetro tipo doppio.
Double support for wooden or glass shelves.
Doppelter Fachbodenträger.
Support duble pour étagères en bois or verre.

finitura
V CR

colori

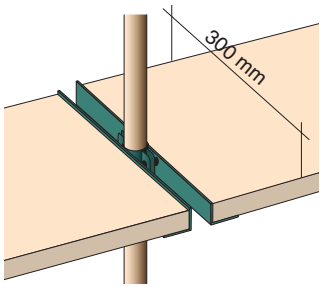

art.433

Griglia.
Grid.
Gitter.
Grille.

finitura
V CR

colori

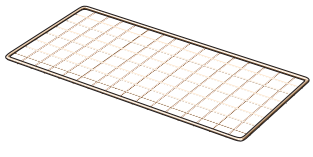

art.434 300x400mm
art.435 300x500mm

Piano griglia.
Grid top.
Gitterabdeckung.
Plateau grillagé.

finitura
V

colori

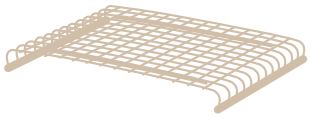

art.436 200x400mm
art.437 200x500mm

Piano plastica.
Plastic top.
Kunststoffabdeckung.
Plateau plastique.

colori

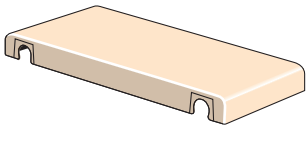

art.438

Ventosa in gomma - Ø 25mm.
Rubber suction cup - Ø 25mm.
Saugfuss aus Gummi - Ø 25mm.
Ventouse en caoutchouc - Ø 25mm.

colori
trasparente
transparent
transparent
transparent

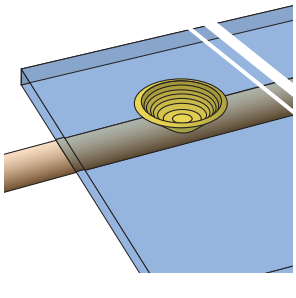

art.439

Supporto cristallo in orizzontale con ventosa.
Horizontal crystal support with suction cup.
Horizontaler Glashalter mit Saugkopf.
Support horizontal pour cristal avec ventouse.

finitura
V CR OT

colori

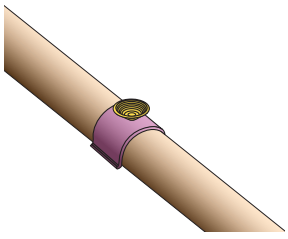

art.440

Supporto cristallo in verticale (Pannello o cristallo sp. 6mm).
Vertical crystal support (Panel or crystal 6mm thick).
Vertikaler Glashalter (Paneel oder Kristallglas. Stärke 6mm).
Support pour cristal vertical (Panneau ou cristal 6mm d'epaisseur).

finitura
V CR OT

colori

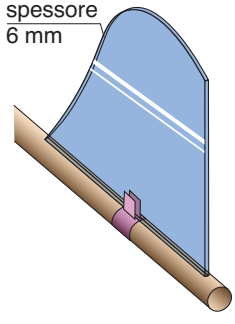

art.442 550mm
art.444 1050mm

Raccordo semicerchio.
Semicircular fitting.
Halbkreis förmiger Rohrbogen.
Raccord semicirculaire.

finitura
V CR

colori

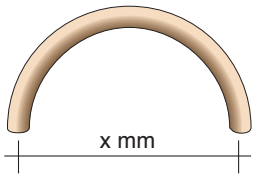

art.445 550mm
art.447 1050mm

Raccordo rettangolo.
Rectangular fitting.
Rechteckiger Rohrbogen.
Raccord rectangulaire.

finitura
V CR

colori

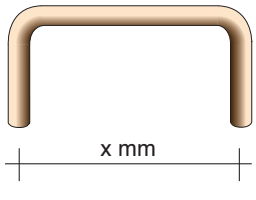

art.448 200x200mm

Raccordo angolare a 90°.
90° angular fitting.
Rohrwinkel 90°.
Raccord angulaire à 90°.

finitura
V CR

colori

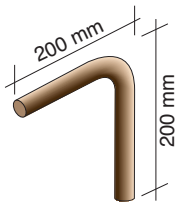

art.452

Braccio espositivo con girella.
Revolving exhibiting arm.
Dreharm.
Bras exposant tournant.

finitura
V CR

colori

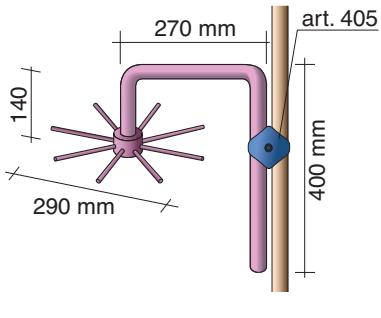

art.453

Braccio espositivo frontale per appenderia a 125°.
Frontal 125° exhibiting arm for clothes rails.
Kleiderstangentragarm 125°.
Bras exposant à 125° porte-vêtements.

finitura
V CR

colori

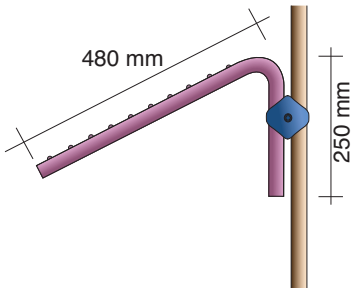

art.454

Braccio espositivo frontale per appenderia a 35°.
Frontal 35° exhibiting arm for clothes rails.
Kleiderstangentragarm 35°.
Bras exposant à 35° porte-vêtements.

finitura
V CR

colori

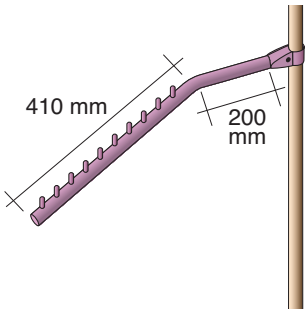

art.455 550mm
art.456 1050mm

Raccordo con braccia sporgenti.
Fitting with projecting arms.
Hervorstehendes Verbindungsstück.
Raccord avec bras saillants.

finitura
V CR

colori

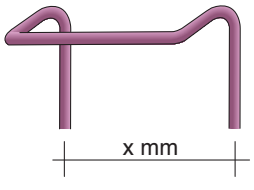

art.457

Ruota gemellata Ø 50 con attacco filettato 10 MA.
Double wheel Ø 50 with 10 MA thread.
Doppelrad mit Gewindenanschluß.
Roue gemellaire Ø 50 filetée 10 MA.

colori

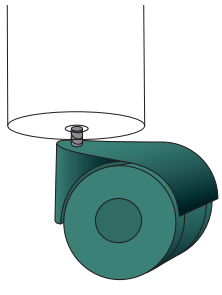

art.458

Boccia terminale - Ø 64mm.
Terminal ball - Ø 64mm.
Abschlusskugel - Ø 64mm.
Terminale boule - Ø 64mm.

finitura
V CR OT

colori

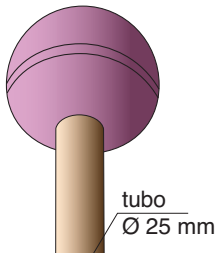

art.459

Copitesta.
Tube top cover.
Endstück für Rohr.
Bouchon pour extremité de tube.

finitura
V CR OT

colori

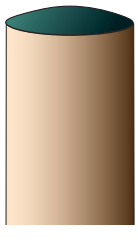

art.460

Tappo terminale esterno Ø 25 mm.
Outer end plug Ø 25mm.
Äußeres Endstück Ø 25mm.
Bouchon terminal externe Ø 25mm.

colori

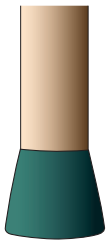

art.461

Tappo alettato chiuso - Ø 25mm.
Closed plug with fins Ø 25mm.
Abschließendes geripptes Endstück Ø 25mm.
Bouchon à ailette fermé - Ø 25mm.

colori

art.462

Tappo alettato con filetto M10 Ø 25mm.
Plug with fins and M10 thread, Ø 25mm.
Geripptes Endstück und M10 Gewinde, Ø 25mm.
Bouchon à ailette fileté M10 Ø 25mm.

colori

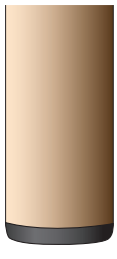

art.463

Mazzetta in zama filettata 10MA - Ø 25mm.
10MA threaded insert in Zn + Al + Mg alloy, Ø 25mm.
Gewindeeinsatz aus Zamak, 10 MA Ø 25mm.
Bouchon fixe en zamac fileté 10MA - Ø 25mm.

finitura

V CR OT

colori

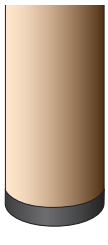

art.464

Regolabile filettato 10MA Ø35.
10MA threaded adjustable insert, Ø35.
Verstellbarer Fußeinsatz, 10MA Ø35.
Pied réglable fileté 10MA Ø35.

finitura:

nickelato
nickel-plated
vernickelt
nickelé

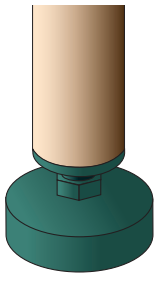

art.465

Espansore liscio in zama.
Plain extension in Zn + Al + Mg alloy.
Einfaches Expanderstück aus Zamak.
Elément d'expansion simple en zamac.

finitura

grezzo
untreated
unbearbeitet
brut

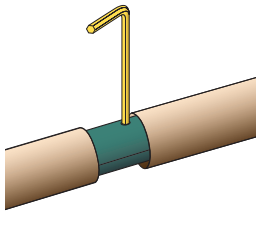

art.466

Ghiera di fissaggio a parete.
Wall support plate.
Wandhalter.
Support a paroi.

finitura
V CR OT

colori

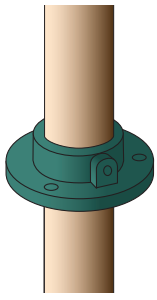

art.467

Supporto distanziatore passante a parete (piccolo).
Wall-mounted spacer support (small).
Durchgehender Wandabstandshalter (klein).
Support mural entretoise à passant (petit).

finitura
V CR OT

colori

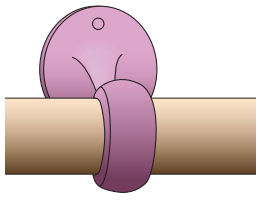

art.468

Supporto distanziatore di estremità a parete (piccolo).
Wall ending bearing spacer (small).
Endwandabstandsstück (klein).
Support bague d'extrémité pour paroi (petit).

finitura
V CR OT

colori

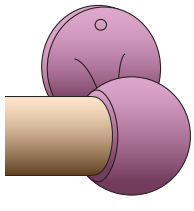

art.469

Supporto distanziatore passante a parete.
Wall passing bearing spacer.
Durchgehendes Wandabstandsstück.
Support bague passant pour paroi.

finitura
V CR OT

colori

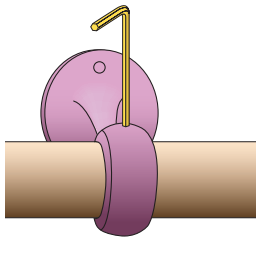

art.470

Supporto distanziatore di estremità a parete.
Wall ending bearing spacer.
Endwandabstandsstück.
Support bague d'extrémité pour paroi.

finitura
V CR OT

colori

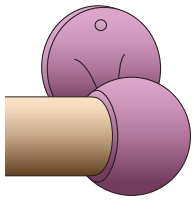

art.471	3mm	
art.472	4mm	per art. 465
art.473	5mm	per art. 420
art.474	6mm	tutti i giunti

Chiave brugola. Hexagonal spanner.
Sechskantschlüssel. Hexagonale clef.

finitura
ZN

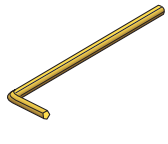

• o lì o là ø 25 mm • o lì o là ø 25 mm • o lì o là ø 25 mm •

finitura	colore
V verniciato - painted - vernickelt - vernis	bianco azzurrato - bluish white - blau abgetöntes Weiss - blanc bleuté
CR cromato - chrome-plated - verchromt - chromé	giallo - yellow - gelb - jaune
ZN zincato - zinc-coated - verzinkt - galvanisé	nero lucido 9005 - gloss black 9005 - schwarz glänzend 9005 - noir brillant 9005
	rosso RAL 3000 - red RAL 3000 - rot RAL 3000 - rouge RAL 3000
I colori dei campioni hanno valore puramente indicativo. *Sample colours are meant as a guide only. Die Musterfarben dienen ausschließlich zur Darstellung. Les coloris des échantillons n'ont qu'une valeur indicative.*	verde RAL 6029 - green RAL 6029 - grün RAL 6029 - vert RAL 6029
	grigio martellato - hammered grey - Hammerschlag grau - gris martelé

effettuati su richiesta - available on request - Auf Wunsch erhältlich - Effectués sur demande

OT ottonato - brass-coated - vermessingt - laitonné

colori speciali - special colours - Spezielle Farben - coloris spéciaux

MONTICELLO

MANART s.r.l.

23876 MONTICELLO - FRAZ. CORTENUOVA (LC) ITALY
Via T. Moneta, 17 - Tel. 039.920.35.55 - 039.920.26.44
Fax 039.920.28.01 www.manart.it e-mail: manart@manart.it

Timbro del rivenditore - Dealer's stamp - Händlerstempel
Timbre du revendeur

LioLaQuadro

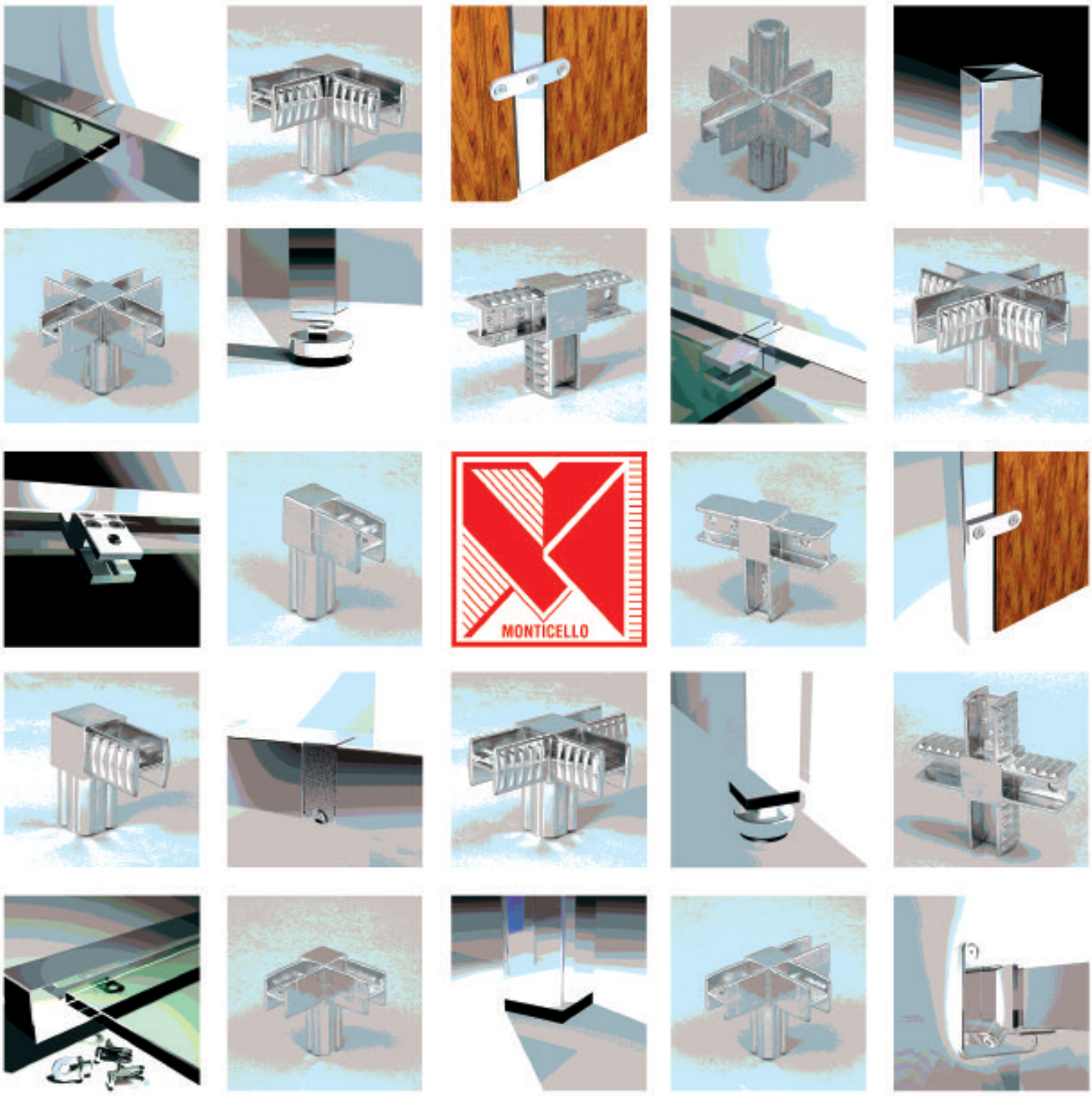

LioLaQuadro

art. 712 25x25x1,2 mm
art. 713 20x20x1,2 mm

Tubo per appendiabiti o arredamento x 3 mt.
Closet tube x 3 mt.
Tubes de Garde-Robes ou decoration x 3 mt.
Schrankrohre x 3 mt.

finitura
finishing
finition
ausfuehrungen

CR

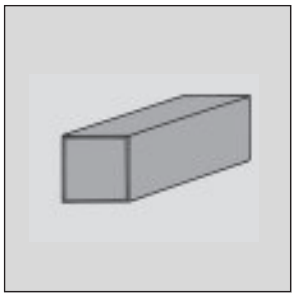

art. 1900 20x20 mm
art. 1910 25x25 mm

ghiera quadra in zama
square wall support plate in zamak
support a paroi carré en zamack
Viereckigmuffe aus Zamak

finitura
finishing
finition
ausfuehrungen

CR

art. 1901/A 20x20 mm
art. 1911/A 25x25 mm

espansore quadrato in zama
square expander in zamak
expander carré en zamack
Viereckigbüchse aus Zamak

finitura
finishing
finition
ausfuehrungen

CR

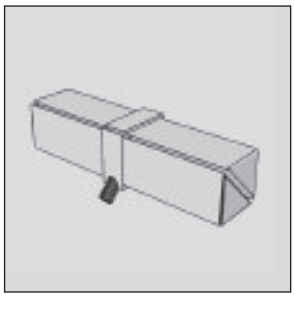

art. 1901/B 20x20 mm
art. 1911/B 25x25 mm

espansore quadro con portapiano in zama
square expander with shelf-support in zamak
expander carrè avec porte étagère en zamack
Viereckigbüchse mit Regalhalter aus Zamak

finitura
finishing
finition
ausfuehrungen

CR

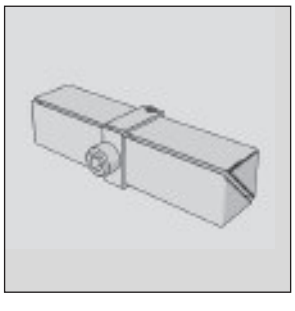

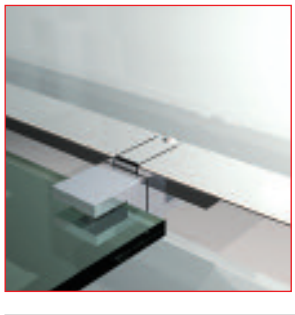

art. 1901/C 20x20 mm
art. 1911/C 25x25 mm

espansore quadro con morsetto in zama
square expander with holfast in zamak
expander carrè avec bome en zamack
Viereckigbüchse mit Klammer aus Zamak

finitura
finishing
finition
ausfuehrungen

CR

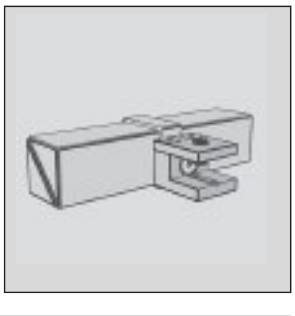

art. 1902

giunto a 2 vie in zama 20x20 mm.
zamak 2-way joint 20x20 mm.
joint 2 voies 20x20 mm. en zamack
2 Wege Verbindung 20x20 mm aus Zamak

finitura
finishing
finition
ausfuehrungen

CR

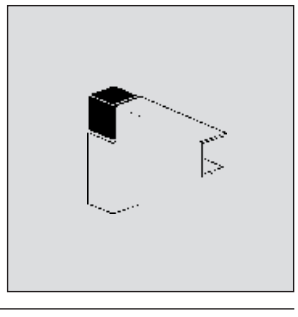

MANART srl - 23876 Monticello (Lc) - Via T. Moneta, 17 - Fraz. Cortenuova - tel. 039 9203555 - 039 9202644 - Fax. 039 9202801
e-mail: manartsrl@manart.191.it - www.manart.it

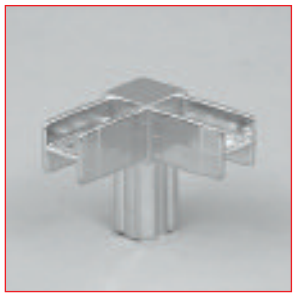

art. 1903

giunto a 3 vie in zama 20x20 mm.
zamak 3-way joint 20x20 mm.
joint 3 voies 20x20 mm. en zamack
3 Wege Verbindung 20x20 mm aus Zamak

finitura
finishing
finition
ausfuehrungen

CR

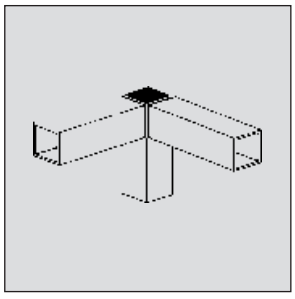

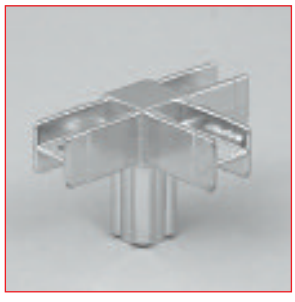

art. 1904

giunto a 4 vie in zama 20x20 mm.
zamak 4-way joint 20x20 mm.
joint 4 voies 20x20 mm. en zamack
4 Wege Verbindung 20x20 mm aus Zamak

finitura
finishing
finition
ausfuehrungen

CR

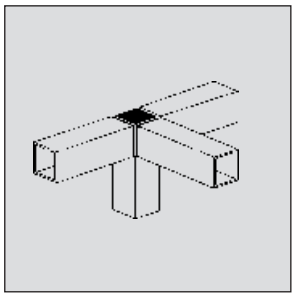

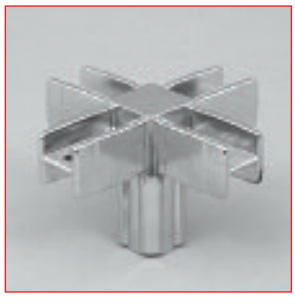

art. 1905

giunto a 5 vie in zama 20x20 mm.
zamak 5-way joint 20x20 mm.
joint 5 voies 20x20 mm. en zamack
5 Wege Verbindung 20x20 mm aus Zamak

finitura
finishing
finition
ausfuehrungen

CR

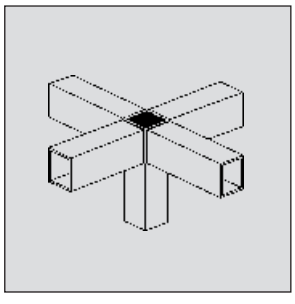

art. 1906

giunto a 6 vie in zama 20x20 mm.
zamak 6-way joint 20x20 mm.
joint 6 voies 20x20 mm. en zamack
6 Wege Verbindung 20x20 mm aus Zamak

finitura
finishing
finition
ausfuehrungen

GR

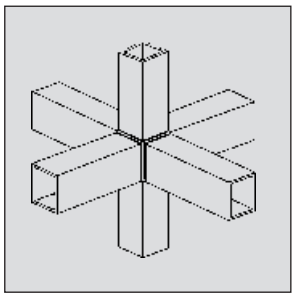

art. 1907

giunto 3 vie a «T» in zama 20x20 mm.
zamak 3-way «T» joint 20x20 mm.
joint 3 voies «T» 20x20 mm. en zamack
3 Wege «T» Verbindung 20x20 mm aus Zamak

finitura
finishing
finition
ausfuehrungen

CR

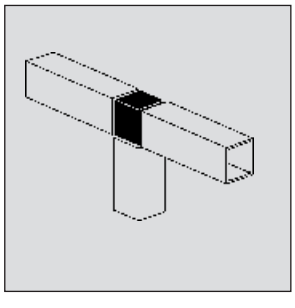

art. 1908

giunto 4 vie a croce in zama 20x20 mm
zamak cros-shaped 4-way joint 20x20 mm.
joint 4 voies a croix 20x20 mm en zamack
4 Wege Kreuzform Verbindung 20x20 mm
aus Zamak

finitura
finishing
finition
ausfuehrungen

CR

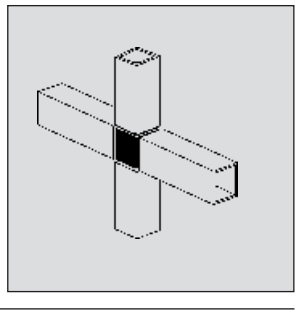

MANART srl - 23876 Monticello (Lc) - Via T. Moneta, 17 - Fraz. Cortenuova - tel. 039 9203555 - 039 9202644 - Fax. 039 9202801
e-mail: manartsrl@manart.191.it - www.manart.it

art. 1912

giunto a 2 vie in zama 25x25 mm
zamak 2-way joint 25x25 mm
joint 2 voies 25x25 mm en zamack
2 Wege Verbindung 25x25 mm aus Zamak

finitura
finishing
finition
ausfuehrungen

CR

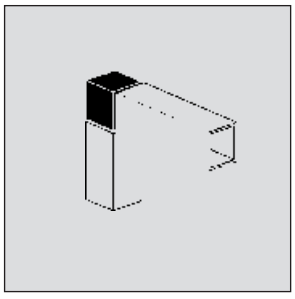

art. 1913

giunto a 3 vie in zama 25x25 mm
zamak 3-way joint 25x25 mm
joint 3 voies 25x25 mm en zamack
3 Wege Verbindung 25x25 mm aus Zamak

finitura
finishing
finition
ausfuehrungen

CR

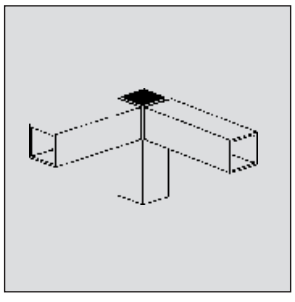

art. 1914

giunto a 4 vie in zama 25x25 mm
zamak 4-way joint 25x25 mm
joint 4 voies 25x25 mm en zamack
4 Wege Verbindung 25x25 mm aus Zamak

finitura
finishing
finition
ausfuehrungen

CR

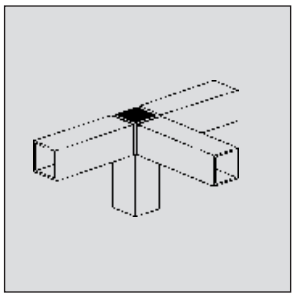

art. 1915

giunto a 5 vie in zama 25x25 mm
zamak 5-way joint 25x25 mm
joint 5 voies 25x25 mm en zamack
5 Wege Verbindung 25x25 mm aus Zamak

finitura
finishing
finition
ausfuehrungen

CR

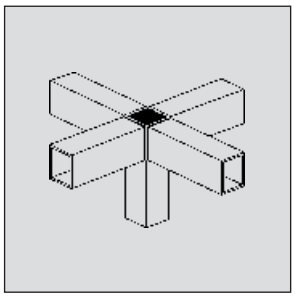

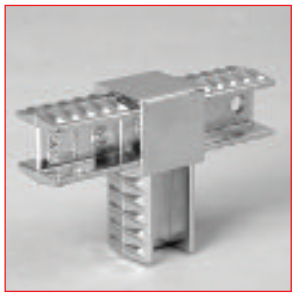

art. 1917

giunto a 3 vie a «T» in zama 25x25 mm
zamak 3-way «T» joint 25x25 mm
joint 3 voies «T» 25x25 mm en zamack
3 Wege «T» Verbindung 25x25 mm aus Zamak

finitura
finishing
finition
ausfuehrungen

CR

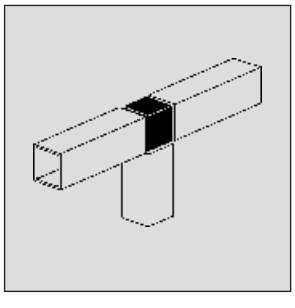

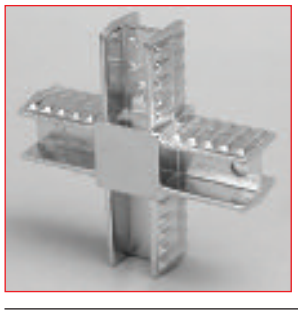

art. 1918

giunto a 4 vie a croce in zama 25x25 mm
zamak cross-shaped 4-way joint 25x25 mm
joint 4 voies a croix 25x25 mm en zamack
4 Wege Kreuzform Verbindung 25x25 mm aus Zamak

finitura
finishing
finition
ausfuehrungen

CR

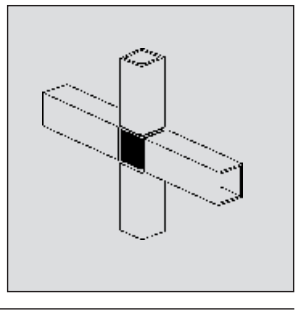

MANART srl - 23876 Monticello (Lc) - Via T. Moneta, 17 - Fraz. Cortenuova - tel. 039 9203555 - 039 9202644 - Fax. 039 9202801
e-mail: manartsrl@manart.191.it - www.manart.it

art. 1922

giunto a 2 vie in plastica 25x25 mm
plastic 2-way joint 25x25 mm
joint en plastique 2 voies 25x25 mm
2 Wege Verbindung 25x25 mm aus Plastik

finitura
finishing
finition
ausfuehrungen

CR

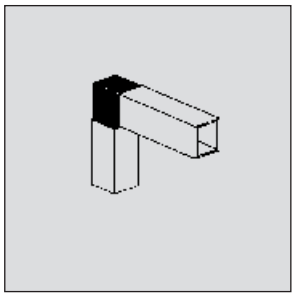

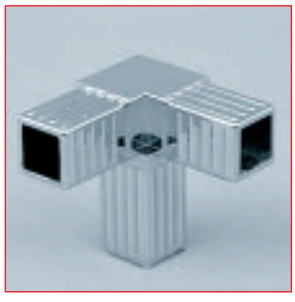

art. 1923

giunto a 3 vie in plastica 25x25 mm
plastic 3-way joint 25x25 mm
joint en plastique 3 voies 25x25 mm
3 Wege Verbindung 25x25 mm aus Plastik

finitura
finishing
finition
ausfuehrungen

CR

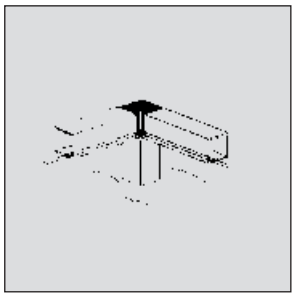

art. 1924

giunto a 4 vie in plastica 25x25 mm
plastic 4-way joint 25x25 mm
joint en plastique 4 voies 25x25 mm
4 Wege Verbindung 25x25 mm aus Plastik

finitura
finishing
finition
ausfuehrungen

CR

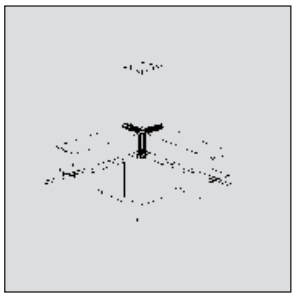

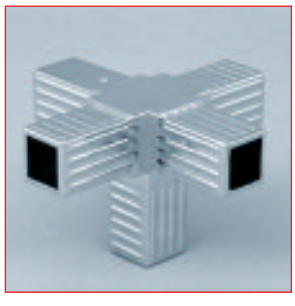

art. 1925

giunto a 5 vie in plastica 25x25 mm
plastic 5-way joint 25x25 mm
joint en plastique 5 voies 25x25 mm
5 Wege Verbindung 25x25 mm aus Plastik

finitura
finishing
finition
ausfuehrungen

CR

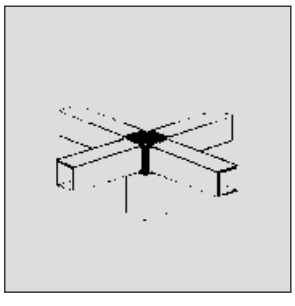

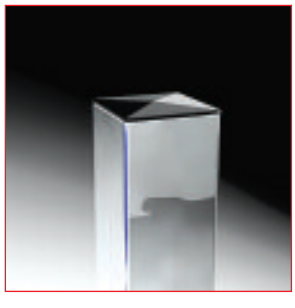

art. 1931 20x20 mm
art. 1936 25x25 mm

tappo per tubo in plastica
plastic tube cap
bouchon pour tube en plastique
Rohrstöpsel aus Plastik

finitura
finishing
finition
ausfuehrungen

CR

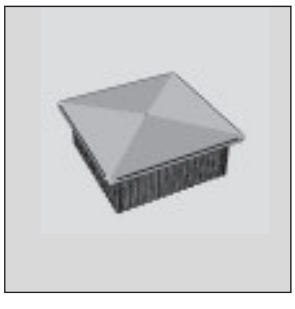

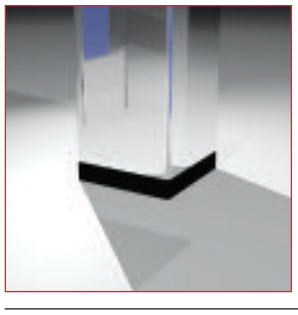

art. 1932 20x20 mm
art. 1937 25x25 mm

piedino alettato in plastica
plastic finned foot
pied à ailettes en plastique
Flügelfuß aus Plastik

finitura
finishing
finition
ausfuehrungen

MANART srl - 23876 Monticello (Lc) - Via T. Moneta, 17 - Fraz. Cortenuova - tel. 039 9203555 - 039 9202644 - Fax. 039 9202801
e-mail: manartsrl@manart.191.it - www.manart.it

art. 1933 20x20 mm
art. 1938 25x25 mm

piedino alettato e filettato 10MA in plastica
plastic finned threaded foot 10MA
pied à ailettes et filete 10MA en plastique
Flügelgewindfuß 10MA aus Plastik

finitura
finishing
finition
ausfuehrungen

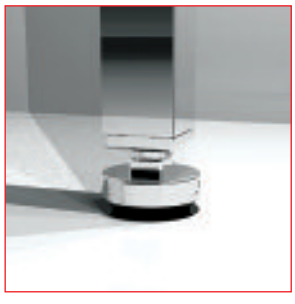

art. 1934 20x20 mm
art. 1939 25x25 mm

mazzetta quadra filettata in zama 10MA
zamak 10MA square threaded insert
maillet carré filete 10MA en zamack
Viereckeinlage 10MA aus Zamak

finitura
finishing
finition
ausfuehrungen

CR

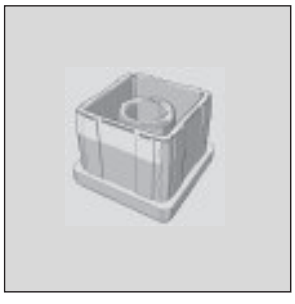

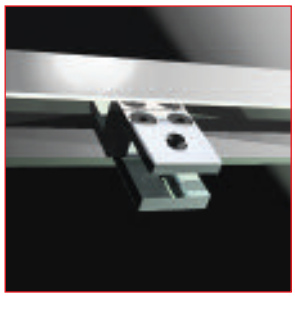

art. 1940/A

morsetto in zama
holfast in zamak
borne en zamack
Klammer aus Zamak

finitura
finishing
finition
ausfuehrungen

CR

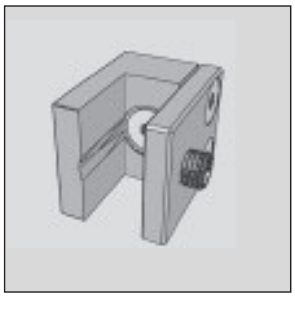

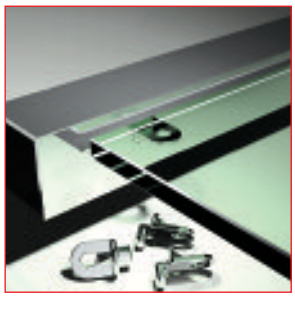

art. 1941

reggipiano “micro” in zama
zamak shelf support “micro”
porte-étagère “micro” en zamack
Regalstütze “micro” aus Zamak

finitura
finishing
finition
ausfuehrungen

GR

art. 1942

piastrina singola per pannello
simple fixing plate for panel
platine de fixation simple pour panneau
Befästigungseinzelnplatte für Getäfel

finitura
finishing
finition
ausfuehrungen

ZN

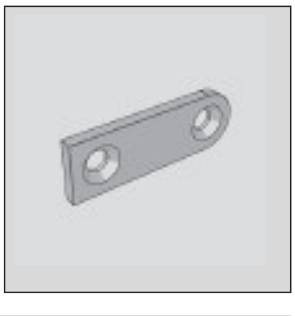

art. 1943

piastrina doppia per pannello
double fixing plate for panel
platine de fixation double pour panneau
Befästigungsdoppelplatte für Getäfel

finitura
finishing
finition
ausfuehrungen

ZN

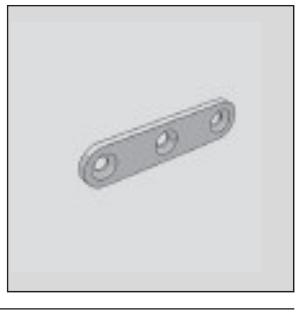

MANART srl - 23876 Monticello (Lc) - Via T. Moneta, 17 - Fraz. Cortenuova - tel. 039 9203555 - 039 9202644 - Fax. 039 9202801
e-mail: manartsrl@manart.191.it - www.manart.it

art. 1944

regolabile filettato 10MA Ø 35
10MA threaded adjustable insert, Ø 35
pied réglable fileté 10MA Ø 35
Verstellbarer Fußeinsatw, 10MA Ø 35

finitura
finishing
finition
ausfuehrungen

NK

AMBIENTAZIONE - FURNISHING SOLUTIONS - SOLUTIONS D'AMEUBLEMENT - AUSSTATTUNG

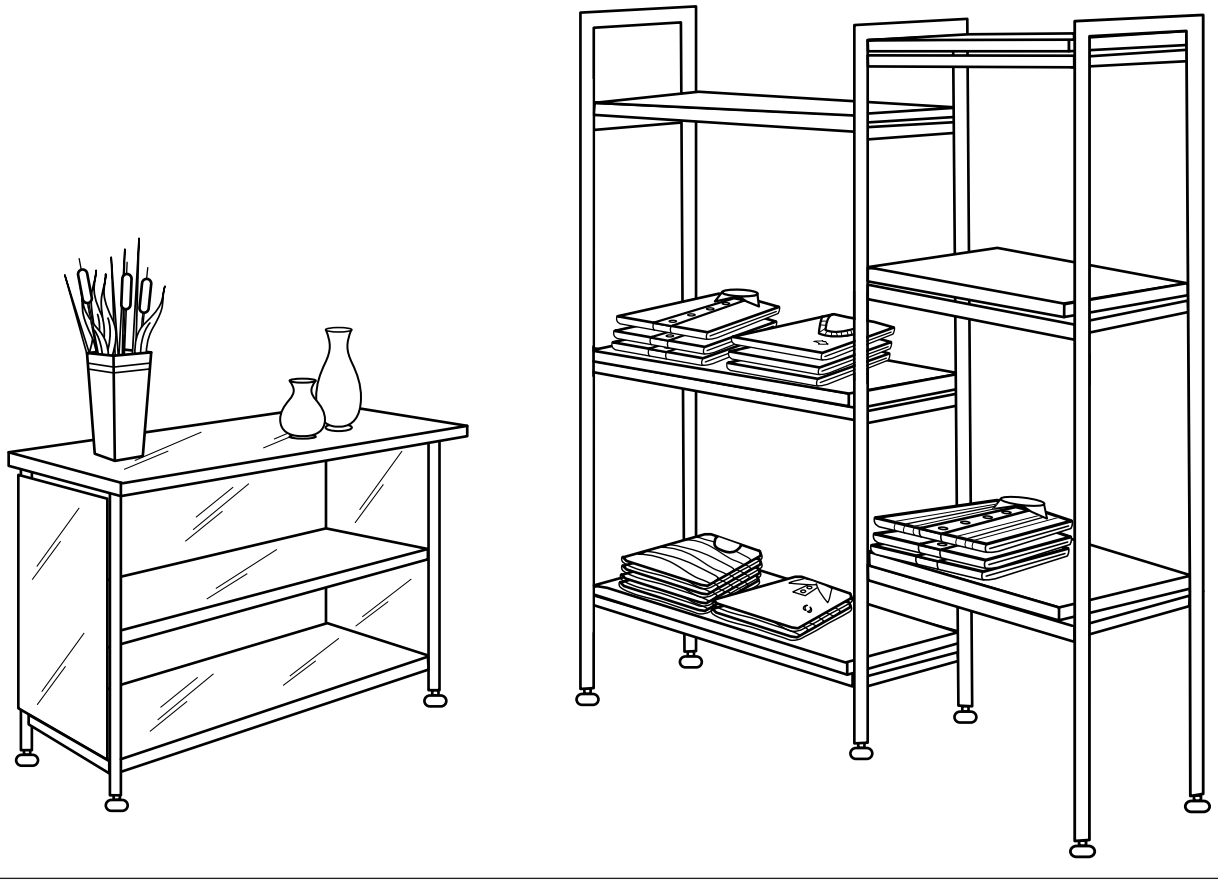

MANART srl - 23876 Monticello (Lc) - Via T. Moneta, 17 - Fraz. Cortenuova - tel. 039 9203555 - 039 9202644 - Fax. 039 9202801
e-mail: manartsrl@manart.191.it - www.manart.it

FINITURA - FINISHING - FINITION - AUSFUEHRUNGEN	
CR cromato - chrome-plated - chromé - verchromt	NK nickelato - nickel-plated - nickelé - vernickelt
ZN zincato - zinc-coated - galvanisé - verzinkt	■ nero - black - noir - schwarz
GR grezzo - raw - brut - roh	
I colori dei campioni hanno valore puramente indicativo. Sample colours are meant as a guide only.	Les coloris des échantillons n'ont qu'une valeur indicative. Die Musterfarben dienen ausschließlich wur Darstellung.

MANART srl
23876 MONTICELLO (Lc) - Fraz. Cortenuova
Via T. Moneta, 17 - tel. 039 9203555 - 039 9202644 - Fax. 039 9202801
e-mail: manartsrl@manart.191.it - www.manart.it

Timbro del rivenditore - Dealer's stamp - Timbre du revendeur
Händlerstempel

MANART

23876 MONTICELLO - Fraz. Cortenuova (LC) ITALY
Via T. Moneta, 17 - Tel. 039.920.35.55 - 039.920.26.44
Fax 039.920.28.01 - e-mail: manart@manart.it
www.manart.it

6

portabiti
portacravatte
portascarpe
per armadi
fermalibri e
ruote

ART. M748

Asta appendiabiti Ø 13 mm. - cm. 110
Tubing Ø 13 mm. - cm. 110 length
Baton portvetement Ø 13 mm. - cm. 110 de longueur
Kleiderstange Ø 13 mm. - cm. 110 laenge

MATERIALE - MATERIAL - MATIÈRE - MATERIAL

Acciaio - Steel - Fer - Stahl

FINITURE - FINISHES - EXÉCUTIONS - AUSFUEHRUNGEN

Cromato - Ottonato - Verniciato
Chrome Plated - Brass Plated -Vernished
Chrome - Laitonne - Verni
Verchromt - Vermessingt - Lackiert

ART. M749

Asta appendiabiti Ø 18 mm. - cm. 110/cm. 150
Tubing Ø 13 mm. - cm. 110/cm. 150 length
Baton portvetement Ø 13 mm. - cm. 110/cm. 150 de longueur
Kleiderstange Ø 13 mm. - cm. 110/cm. 150 laenge

MATERIALE - MATERIAL - MATIÈRE - MATERIAL

Acciaio - Steel - Fer - Stahl

FINITURE - FINISHES - EXÉCUTIONS - AUSFUEHRUNGEN

Cromato - Ottonato - Verniciato
Chrome Plated - Brass Plated -Vernished
Chrome - Laitonne - Verni
Verchromt - Vermessingt - Lackiert

ART. M750

Portascarpe allungabile cm.45/75 o 80/110, con fissaggio in nylon.
Adjustable shoe rack cm. 45/75 or 80/110 length, with nylon fixing,
Porte-chaussures, extensible cm. 45/75 ou 80/110 de longueure,
avec fixation en nylon.
Schuhstaender, verstellbar cm. 45/75 oder 80/110 laenge, mit Nylonbefestigung.

MATERIALE - MATERIAL - MATIÉRE - MATERIAL

Acciaio e nylon.
Steel and nylon.
Acier et nylon.
Stahl und Nylon.

FINITURE - FINISHES - EXECUTIONS - AUSFUEHRUNGEN

Cromato - Ottonato - Verniciato.
Chrome Plated - Brass Plated - Vernished.
Chrome - Laitonne - Verni.
Verchromt - Vermessingt - Lackiert.

Fissaggio disponibile in nero o grigio-alluminio.
Fixing available in black or grey-aluminium color.
Fixation disponible en gris-aluminium ou noir.
Befestigung in schwarz oder grau-aluminium erhältlich.

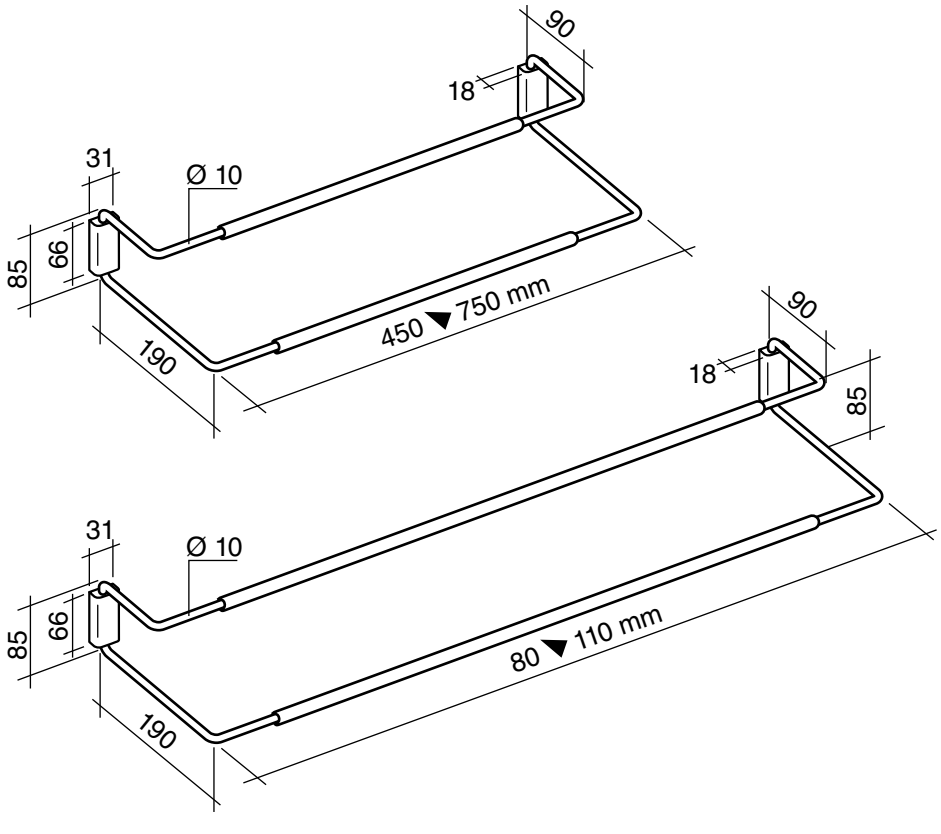

MANART srl - 23876 MONTICELLO - FRAZ. CORTENUOVA (LC) ITALY - Via T. Moneta, 17 - Tel. 039.920.35.55 - 039.920.26.44 - Fax 039.920.28.01
www.manart.it e-mail: manart@manart.it

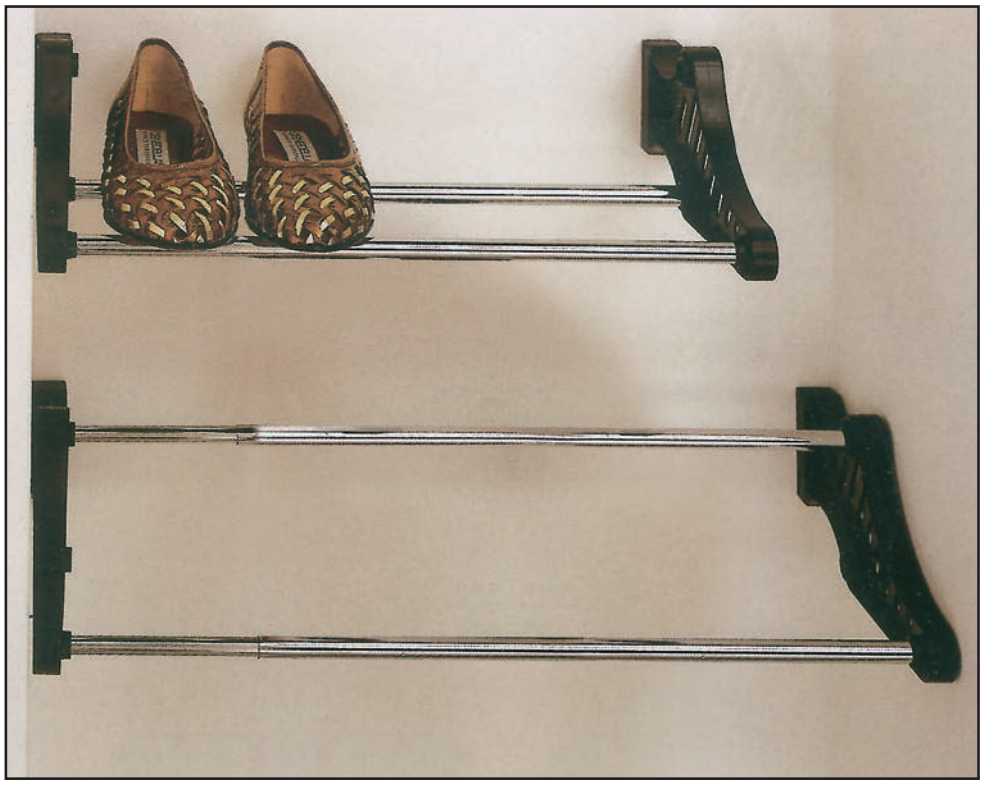

ART. 751

Portascarpe allungabile cm. 40/70 - cm. 80/110
Adjustable shore rack 40/70 -
cm. 80/110 length
Porte-chaussures, extensible 40/70 -
cm. 80/110 de longueure
Schuhstaender, verstellbar 40/70 -
cm. 80/110 laenge

MATERIALE - MATERIAL - MATIÈRE - MATERIAL

Acciaio - Steel - Fer - Stahl

FINITURE - FINISHES - EXÉCUTIONS - AUSFUEHRUNGEN

Cromato - Ottonato - Verniciato
Chrome Plated - Brass Plated - Varnished
Chrome - Laitonne - Verni
Verchromt - Vermessingt - Lackiert

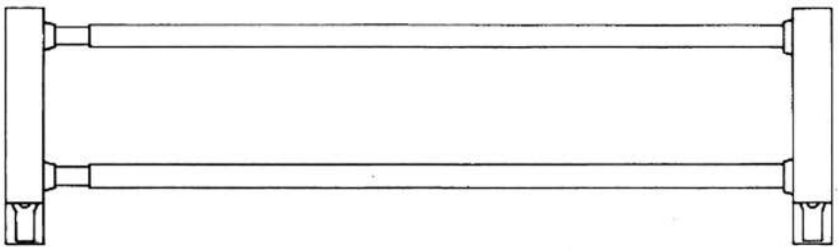

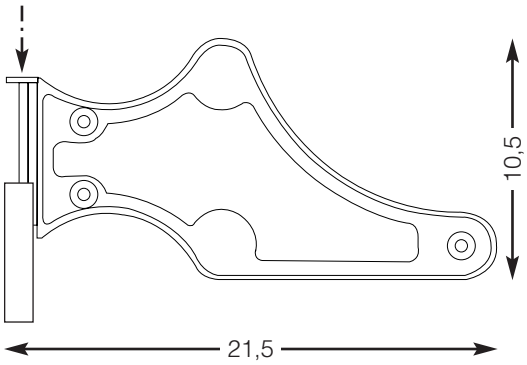

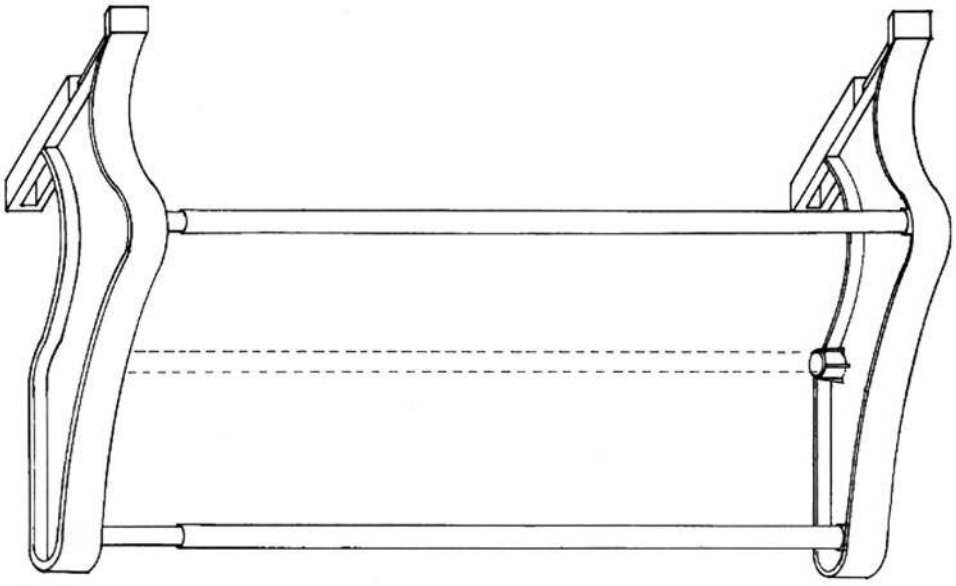

ART. 752

Porta pantaloni salvaspazio estraibile a quattro posti, realizzato nella finitura nero con tubi cromati.
cm. 45x20

Pull-out four-divider trouser hanger in a black finish with chromium-plated rails.
cm. 45x20

Porte-pantalons extractible peu encombrant pour quatre pantalons, finition noire avec tubes chromés.
cm. 45x20

Ein ausziehbarer und raumsparender Hosenaufhänger mit vier Hosenbügeln, schwarz mit verchromten Rohren.
cm. 45x20

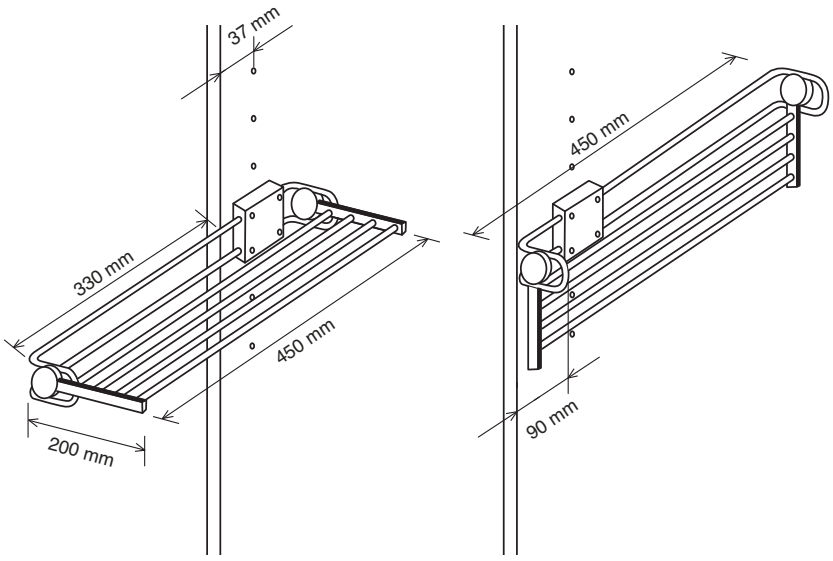

MANART srl 23876 MONTICELLO - Fraz. Cortenuova (LC) ITALY - Via T. Moneta, 17
Tel. 039.920.35.55 - 039.920.26.44 - Fax 039.920.28.01 - e-mail: manart@manart.it - www.manart.it

ART. 753

Portabiti estraibile, realizzato nella finitura nera con tubi cromati.
cm. 30/35/40/45

Pull-out holder for clothes hangers in a black finish with chromium-plated rails.
cm. 30/35/40/45

Portemanteau extractible, finition noire avec tubes chromés.
cm. 30/35/40/45

Ausziehbare Kleiderstange, schwarz mit verchromten Rohren.
cm. 30/35/40/45

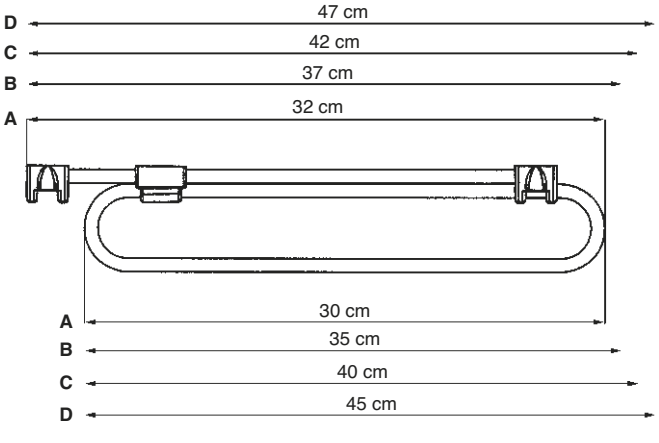

MANART srl - 23876 MONTICELLO - FRAZ. CORTENUOVA (LC) ITALY - Via T. Moneta, 17 - Tel. 039.920.35.55 - 039.920.26.44 - Fax 039.920.28.01
www.manart.it e-mail: manart@manart.it

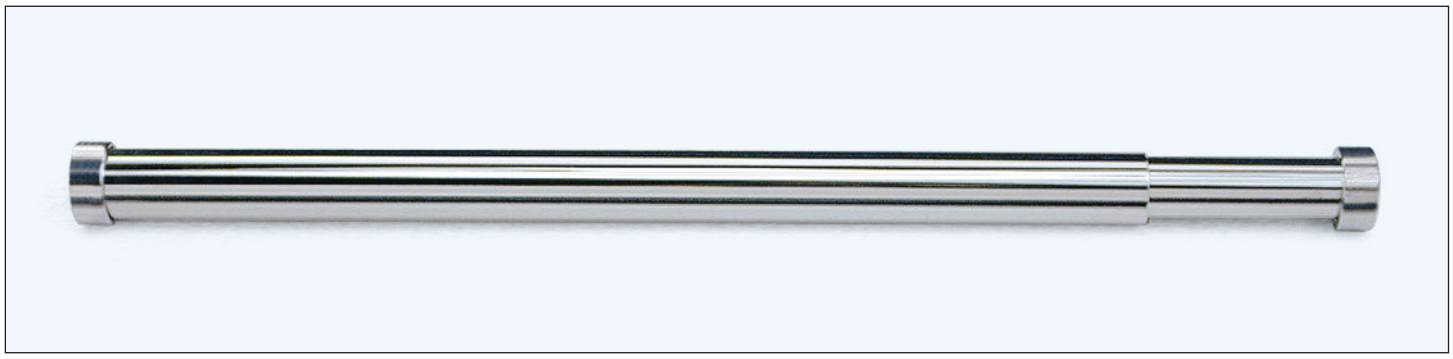

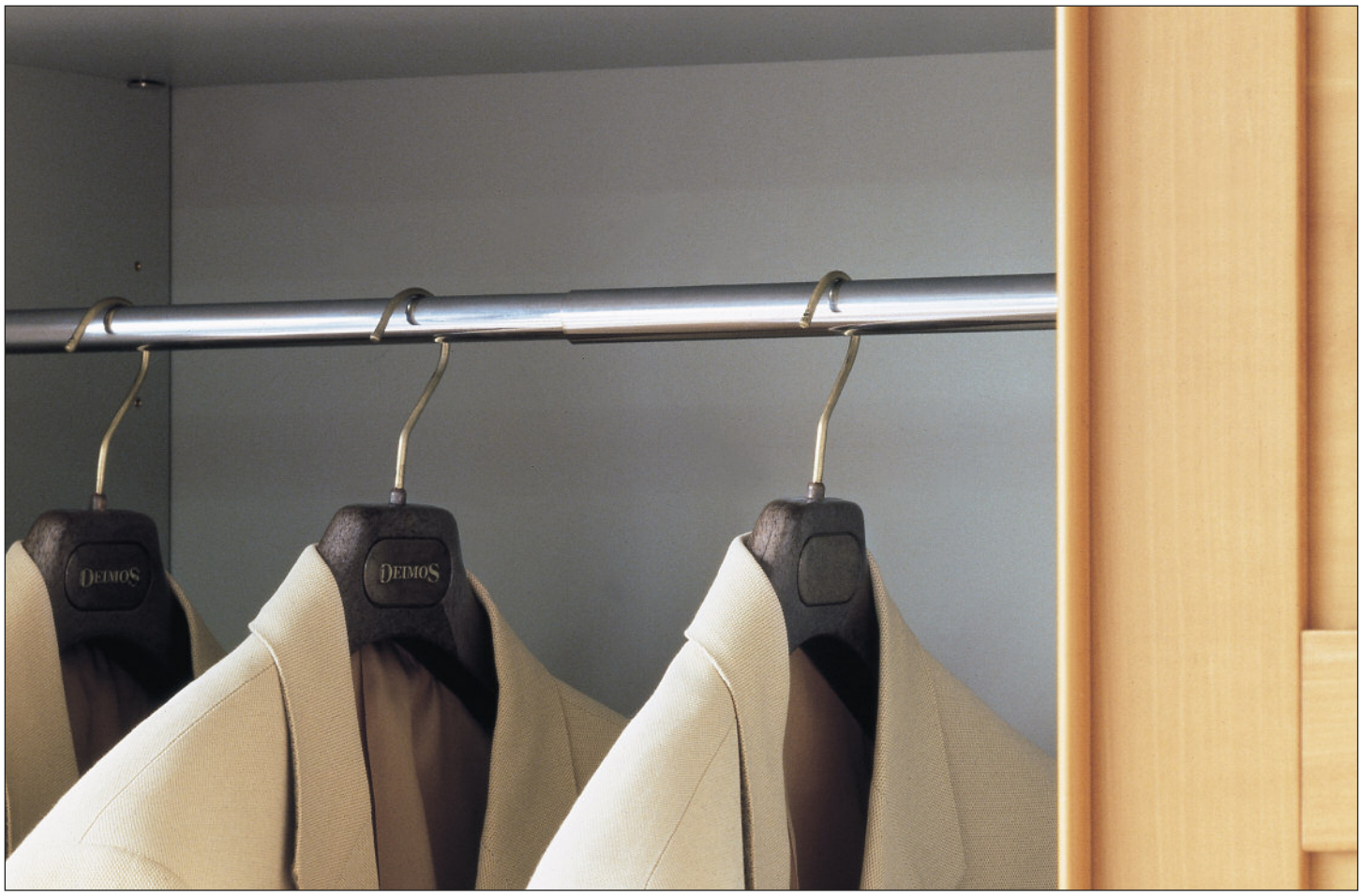

ART. 754

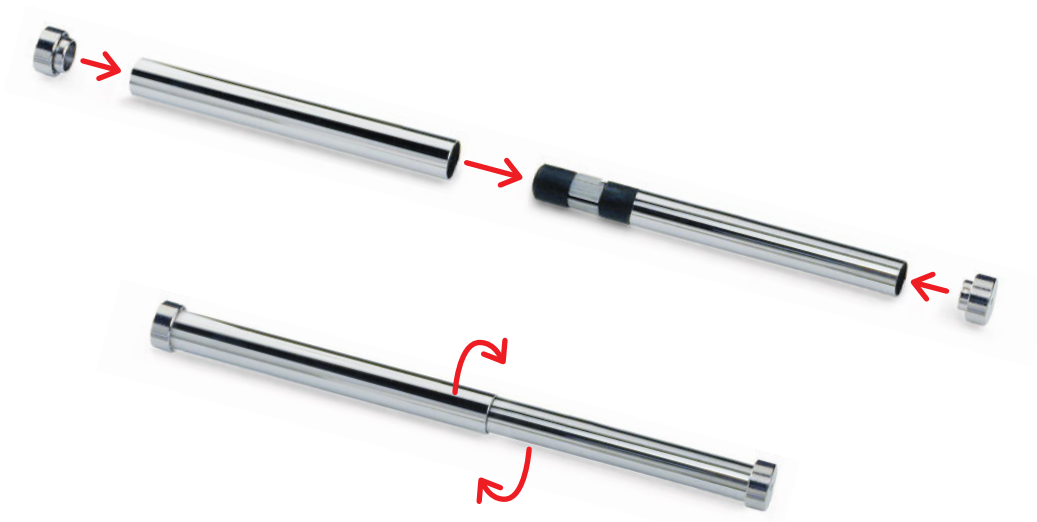

Tubo telescopico cromato Ø 22 mm.
Vano 390/620 mm. Vano 670/1150 mm.

Chromium-plated telescopic tringle Ø 22 mm.
Internal compartment 390/620 mm.
Internal compartment 670/1150 mm.

Tringle télescopique chromée Ø 22 mm.
Compartiment 390/620 mm.
Compartiment 670/1150 mm.

Verchromtes, verlängerbares Rohr, Ø 22 mm.
Schrankfach 390/620 mm.
Schrankfach 670/1150 mm.

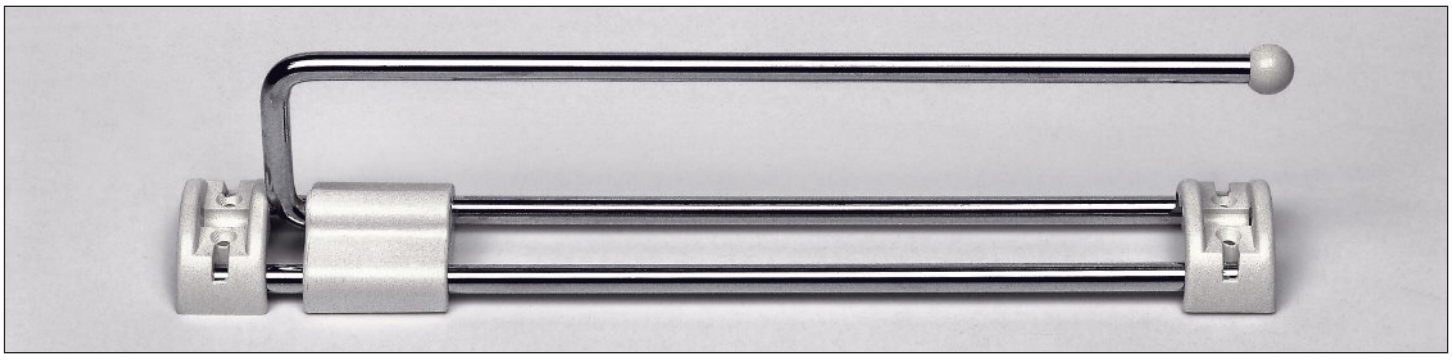

ART. 755

Portasciugamani estraibile da porre all'interno di vani per salvaguardare l'ordine del vostro ambiente. Realizzato nella finitura bianca con tubo cromato.
cm. 30/40.

Pull-out towel rail to be mounted in internal compartments so as to keep your room tidy. Available in a white finish with chromium-plated rail.
cm. 30/40.

Porte-serviettes extractible à placer à l'intérieur des compartiments pour avoir toujours tout en ordre. Finition blanche avec tube chromé.
cm. 30/40

Ausziehbarer Handtuchhalter, der im Innern von Schrankfächern angebracht werden kann, um die Ordnung Ihres Raumambientes nicht zu stören. In weiss mit verchromtem Rohr.
cm. 30/40

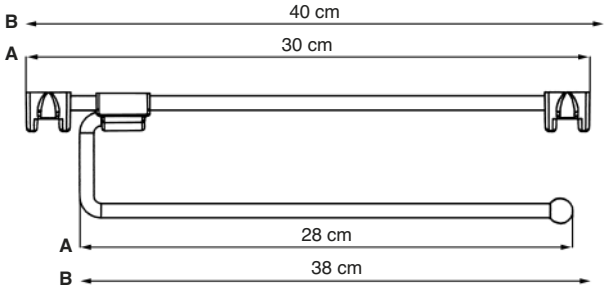

MANART srl - 23876 MONTICELLO - FRAZ. CORTENUOVA (LC) ITALY - Via T. Moneta, 17 - Tel. 039.920.35.55 - 039.920.26.44 - Fax 039.920.28.01
www.manart.it e-mail: manart@manart.it

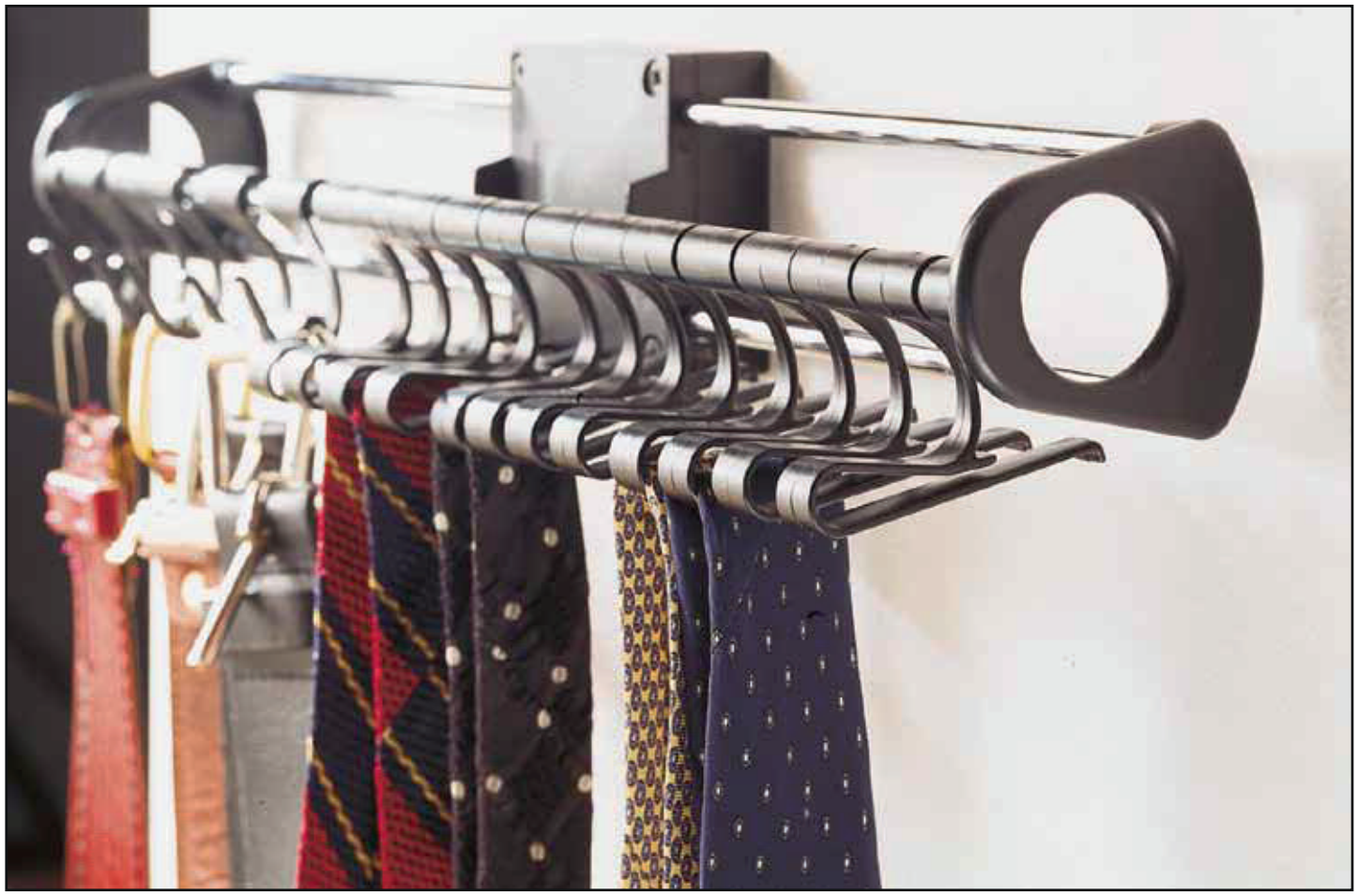

ART. 756

Porta cravatte - porta cinture.
Estraibile e disponibile nelle finiture nero, con tubi cromati.
Possibilità di fissaggio alla base parete.

Tie rack and belts holder.
Extractable and available in black, with chromium plated rails.
Possibility of fixing to the wall base.

Porte-cravates - Porte-ceintures.
Retirable et disponible dans les couleurs noir, avec tubes chromés.
Possibilité de mise en place à la base du mur.

Krawatten- und Gürtelhalter
Ausziehbar un lieferbar in schwarz, mit verchromten Rohren.
Kann an den Verbinder zur Wandbefestigung eingehakt werden.

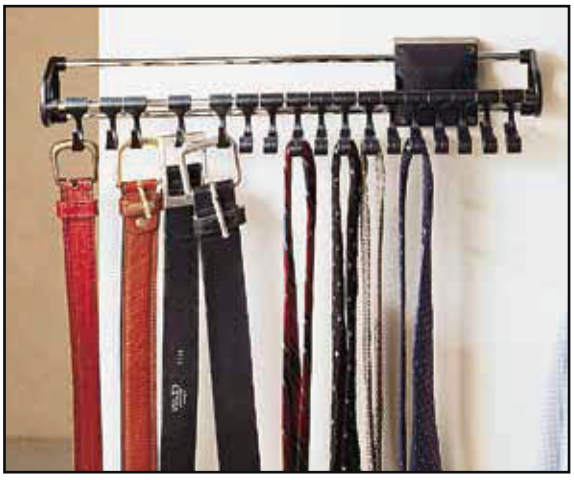

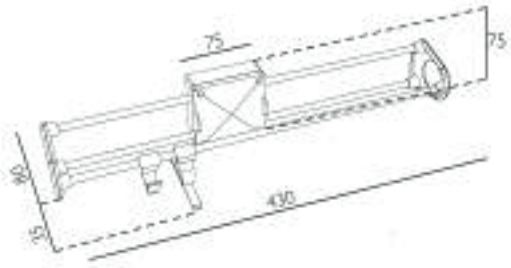

ART. M760S

Appendiabiti inclinabile per armadi. Portata massima: kg. 10.
Dimensioni disponibili in 3 larghezze estensibili da:
A) 45 a 60 cm., B) 61 a 99 cm., C) 78 a 115 cm.
Finiture: nichelato, ottonato, alluminio.

Reclining clothes stand for wardrobe. Maximum load capacity: kgs. 10.
Dimensions: available in 3 extensible widthes:
from 45 to 60 cm., from 61 to 99 cm., from 78 to 115 cm.
Finishes: nickel, brassed, Aluminium.

Valet muet inclinable pour armoires. Portée maximale: kg. 10.
Dimensions: disponible en 3 langeurs extensibles
de 45 à 60 cm., de 61 à 99 cm., de 78 a 115 cm.
Finissages: nickelé, laitonné, aluminium.

Neiborer Kleiderständer für Schränke. Größt Trogfähigkeit: kg. 10.
Mäße: Verfügbar in 3 dehnbaren Breiten
von 45 bis 60 cm., von 61 bis 99 cm., von 78 bis 115 cm.
Ausführungen: vernickelt, vermessingt, aluminium.

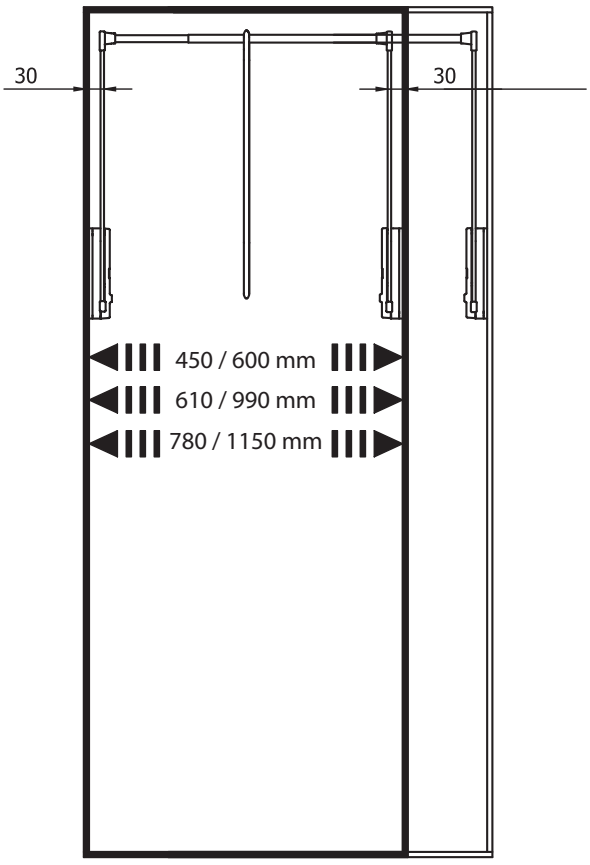

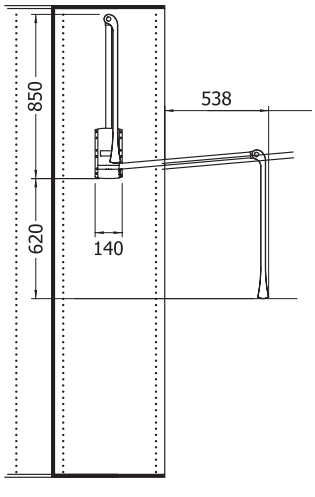

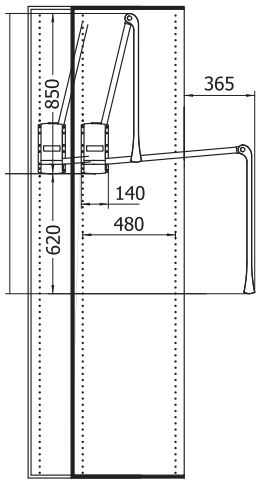

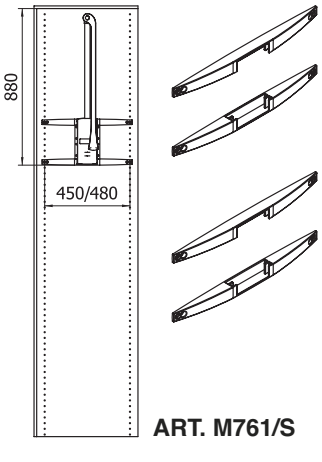

ART. M761/S

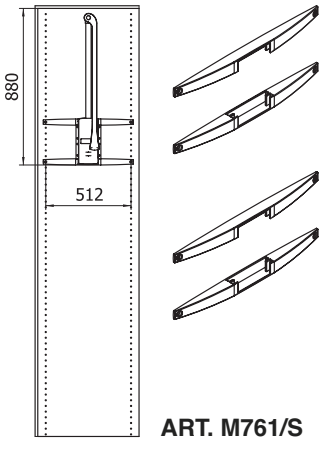

ART. M761/S

ART. M761/S

Disponibile su richiesta set di 4 supporti per strutture in tamburato:
L. 450/480 - mm L. 512 mm.
Available on request set of 4 supports for honey-comb core plywood structures: L. 450/480 - mm L. 512 mm.
Disponible a demande série de 4 supports pour structures en aggloméré replaqué: L. 450/480 - mm L. 512 mm.
Verfügbar auf Wunsh Satz von 4 Stützen für Sperrholzaufbauten:
L. 450/480 - mm L. 512 mm.

ART. M765/S

Distanziali supplementari
sp. 20 mm set 2 pezzi.
Set of 2 additional supports.
Thickness 20 mm.
Lot de 2 supports supplémentaires. Epaisseur 20 mm.
Set mit 2 Zusatzhaltern erhältlich.
Dicke 20 mm.

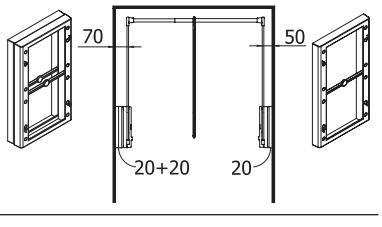

MANART srl - 23876 MONTICELLO - FRAZ. CORTENUOVA (LC) ITALY - Via T. Moneta, 17 - Tel. 039.920.35.55 - 039.920.26.44 - Fax 039.920.28.01
www.manart.it e-mail: manart@manart.it

ART. 2050

FIL 8MA o FIL 10MA

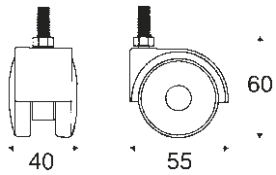

Ruota piroettante Ø 45 mm.
Turning castor Ø 45 mm.
Virevoltan ruote Ø 45 mm.
Drehbare Rolle Ø 45 mm.

FISSAGGIO - FIXING - FIXAGE - FIXIERUNG

Perno 8MA o 10MA.
Screw 8MA or 10MA.
Vis 8MA ou 10MA.
Schraube 8MA oder 10MA.

ART. 2050

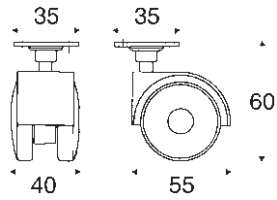

Ruota piroettante Ø 45 mm.
Turning castor Ø 45 mm.
Virevoltan ruote Ø 45 mm.
Drehbare Rolle Ø 45 mm.

FISSAGGIO - FIXING - FIXAGE - FIXIERUNG

Piastra 35 x 35 mm.
Plate 35 x 35 mm.
Plaque 35 x 35 mm.
Platte 35 x 35 mm.

ART. 2051

FIL 8MA o FIL 10MA

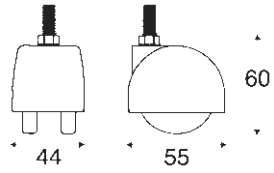

Ruota piroettante Ø 45 mm con copertura.
Turning castor Ø 45 mm with cover.
Virevoltan ruote Ø 45 mm avec couverture.
Drehbare Rolle Ø 45 mm mit Decke.

FISSAGGIO - FIXING - FIXAGE - FIXIERUNG

Perno 8MA o 10MA.
Screw 8MA or 10MA.
Vis 8MA ou 10MA.
Schraube 8MA oder 10MA.

ART. 2051

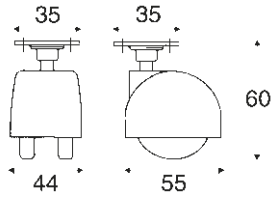

Ruota piroettante Ø 45 mm con copertura.
Turning castor Ø 45 mm with cover.
Virevoltan ruote Ø 45 mm avec couverture.
Drehbare Rolle Ø 45 mm mit Decke.

FISSAGGIO - FIXING - FIXAGE - FIXIERUNG

Piastra 35 x 35 mm.
Plate 35 x 35 mm.
Plaque 35 x 35 mm.
Platte 35 x 35 mm.

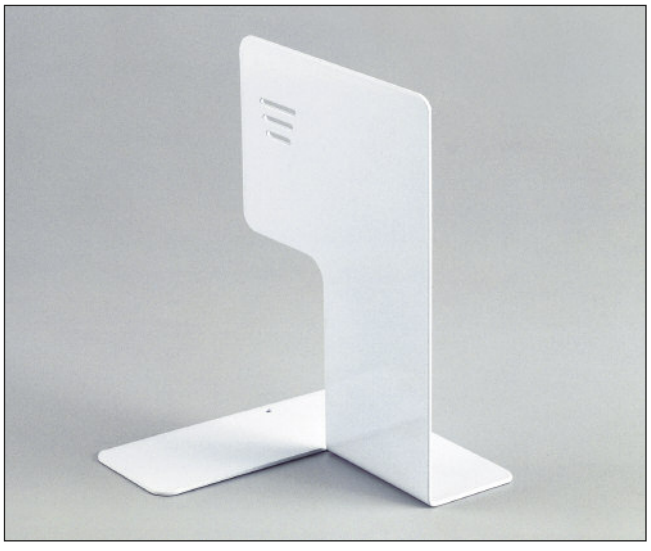

ART. 2100

Fermalibro in acciaio verniciato.
Firm-book.
Blocage pour libres.
Blockierung fuer Buecher.

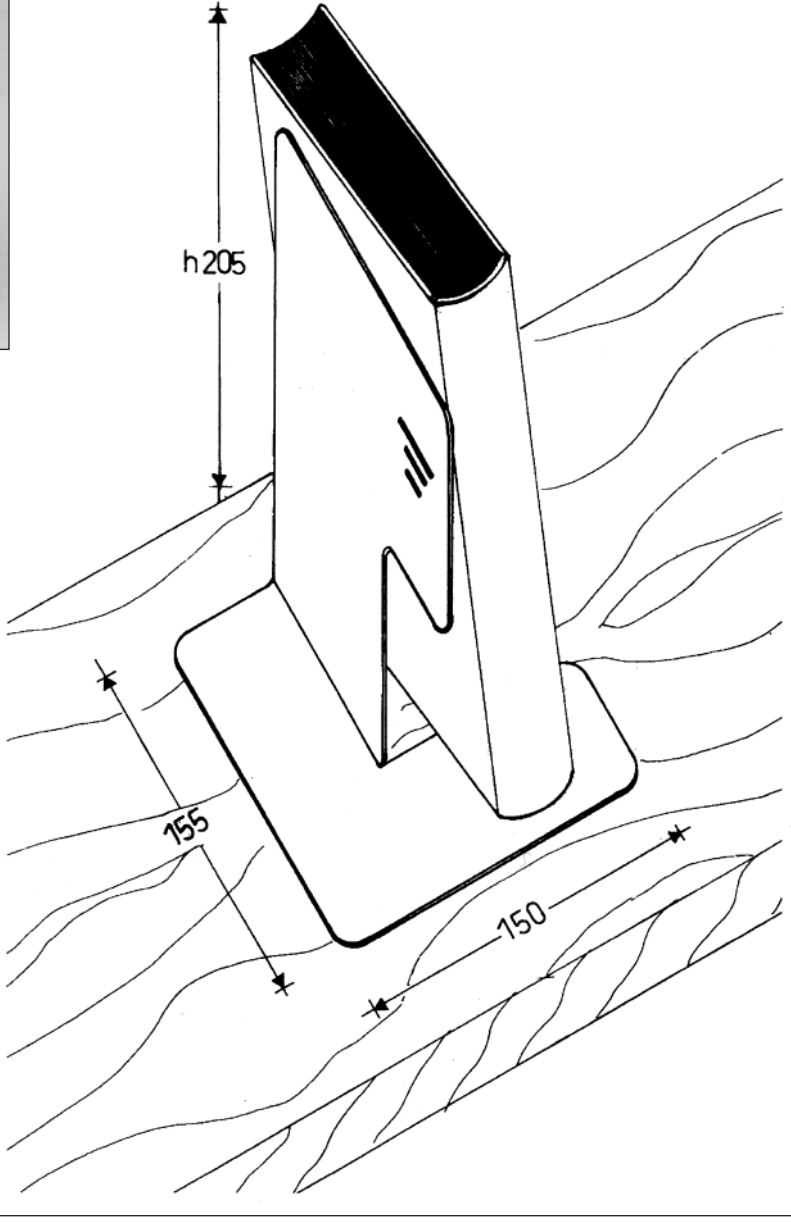

MANART srl - 23876 MONTICELLO - FRAZ. CORTENUOVA (LC) ITALY - Via T. Moneta, 17 - Tel. 039.920.35.55 - 039.920.26.44 - Fax 039.920.28.01
www.manart.it e-mail: manart@manart.it

MANART

23876 MONTICELLO - Fraz. Cortenuova (LC) ITALY
Via T. Moneta, 17 - Tel. 039.920.35.55 - 039.920.26.44
Fax 039.920.28.01 - e-mail: manart@manart.it
www.manart.it

7 sedie
poltrone
sgabelli
scalette
appendiabiti

Art. 334

ART. 334

Sedia in tubo acciaio Ø 30 mm.
Verniciata epossidica in tutti i colori;
cromato, ottonato, satinato.
Sedile legno, gomma club nera o grigia,
o paglia lavabile plastificata:
naturale, grigia, nera, bianca.

Chair in steel tube Ø 30 mm.
Epoxydic painting every coulor,
chromed, brassed, satined.
Seat: wood, rubber club black or gray,
or washable straw (plastic):
natural, black, gray, white.

Chaise, tube en acier Ø 30 mm.
Peinture époxyde tous les couleurs,
chromé, laitonné, satiné.
Siège: bois, caoutchouc club noir ou gris,
paille lavable plastifié: naturel, noir, gris, blanc.

Stahlrohrstuhl Ø 30 mm.
Epoxylackierung alle Farben,
verchromt, vermessingt, satiniert.
Mit Holzsitz, Gummisitz club schwarz oder grau,
oder waschbar Kunststoffbeschichtet Strohsitze:
natural, schwarz, grau, weiss.

Art. 337

ART. 337

Sedia in tubo acciaio Ø 30 mm.
Verniciata epossidica in tutti i colori;
cromato, ottonato, satinato.
Sedile legno, gomma club nera o grigia,
o paglia lavabile plastificata:
naturale, grigia, nera, bianca.

Chair in steel tube Ø 30 mm.
Epoxydic painting every coulor,
chromed, brassed, satined.
Seat: wood, rubber club black or gray,
or washable straw (plastic):
natural, black, gray, white.

Chaise, tube en acier Ø 30 mm.
Peinture époxyde tous les couleurs,
chromé, laitonné, satiné.
Siège: bois, caoutchouc club noir ou gris,
paille lavable plastifié: naturel, noir, gris, blanc.

Stahlrohrstuhl Ø 30 mm.
Epoxylackierung alle Farben,
verchromt, vermessingt, satiniert.
Mit Holzsitz, Gummisitz club schwarz oder grau,
oder waschbar Kunststoffbeschichtet Strohsitze:
natural, schwarz, grau, weiss.

Art. 336

ART. 336

Sedia in tubo acciaio Ø 16 mm.
Verniciata epossidica in tutti i colori;
cromato, ottonato, satinato.
Sedile legno, gomma club nera o grigia,
o paglia lavabile plastificata:
naturale, grigia, nera, bianca.

Chair in steel tube Ø 16 mm.
Epoxydic painting every coulor,
chromed, brassed, satined.
Seat: wood, rubber club black or gray,
or washable straw (plastic):
natural, black, gray, white.

Chaise, tube en acier Ø 16 mm.
Peinture époxyde tous les couleurs,
chromé, laitonné, satiné.
Siège: bois, caoutchouc club noir ou gris,
paille lavable plastifié: naturel, noir, gris, blanc.

Stahlrohrstuhl Ø 16 mm.
Epoxylackierung alle Farben,
verchromt, vermessingt, satiniert.
Mit Holzsitz, Gummisitz club schwarz oder grau,
oder waschbar Kunststoffbeschichtet Strohsitze:
natural, schwarz, grau, weiss.

ART. 325 / 331 / 334 / 336 / 337

FINITURE DISPONIBILI PER SEDILI
AVAILABLE FINISHES FOR SEATS
EXECUTIONS DISPONIBLES POUR SIEGES
VERFUEGBARE AUSFUEHRUNGEN FUER SITZE

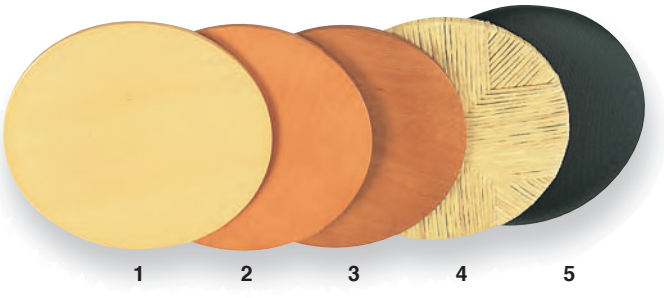

1. Sedile legno naturale / Natural wood seat
   Siège bois naturel / Natural Holz Sitze
2. Sedile legno tinta ciliegio / Painted cherry wood seat
   Siège bois laqué cerisier / Lackiert Kirschholz Sitze
3. Sedile legno tinta noce / Painted walnut wood seat
   Siège bois laqué noyer / Lackiert Nussbaumholz Sitze
4. Sedile paglia lavabile plastificata / Washable straw (plastic) seat
   Siège paille lavable plastifié / Waschbar Kunststoffbeschichtet Strohsitze
5. Sedile gomma club nero o grigio / Rubber seat club black or gray
   Siège caoutchouc club noir ou gris / Gummisitz club schwarz oder grau.

MANART srl - 23876 MONTICELLO (LC) - Via T. Moneta, 17 - Fraz. Cortenuova - Tel. 039.9203555 - 039.9202644 - Fax 039.9202801
e-mail: manart@manart.it - www.manart.it

ART. 338

Sedia in tubo acciaio ellittico 30x15 mm.
Verniciata alluminio RAL 9006, verniciata satinata, cromata, nickel satinata.
Sedile legno faggio naturale, tinto ciliegio, tinto noce, wenge, rovere sbiancato, paglia plastificata

Chair in steel elliptical tube 30x15 mm.
Painted aluminium RAL 9006, painted satined, chromed, nickel satined.
Seat made in natural hetre, painted cherry, painted walnut, wenge, white oak, straw plastic seat.

Chaise tube en acier elliptique 30x15 mm.
Vernisse aluminium RAL 9006, vernisse satine, chrome, nickel satine.
Siège bois naturel, laqué cerisier, laqué noyer, wenge, blanc rouvre, paille plastifié.

Stahlrohrstuhl, Durchm. Elliptisch 30x15 mm.
Epoxylackiert aluminium RAL 9006, epoxylackiert satiniert, verchromt, nickel satiniert.
Natural Holz Sitz, lackiert Kirschholz, Lackiert Nussbaumholz, wenge, weiss eich, Waschbar Kunststoffbeschichtet Stronsitze.

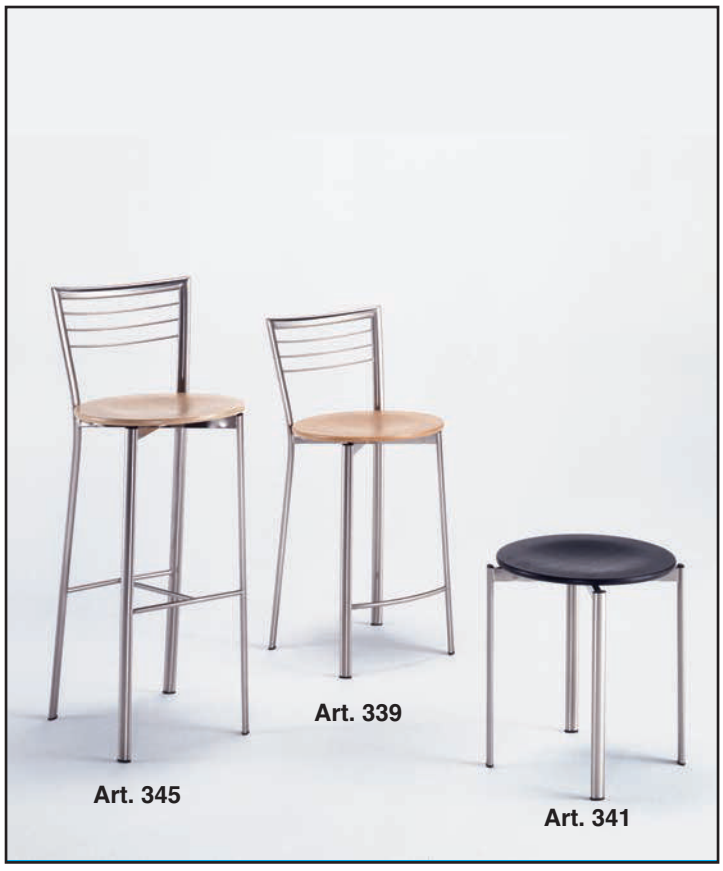

ART. 339 / 341 / 345

Sgabello in tubo acciaio ellittico 30x15 mm., cm. 46, cm. 60, cm. 76 (cm. 60 e cm. 76 con poggiapiedi)
Verniciata alluminio RAL 9006, verniciata satinata, cromata, nickel satinata.
Sedile legno faggio naturale, tinto ciliegio, tinto noce, wenge, rovere sbiancato, paglia plastificata

Stool in steel elliptical tube 30x15 mm., cm. 46, cm. 60, cm. 76 (cm. 60 and cm. 76 with foot rest).
Painted aluminium RAL 9006, painted satined, chromed, nickel satined.
Seat made in natural hetre, painted cherry, painted walnut, wenge, white oak, straw plastic seat.

Escabeau tube en acier elliptique 30x15 mm., cm. 46, cm. 60, cm. 76 (cm. 60 and cm. 76 avec repose pied).
Vernisse aluminium RAL 9006, vernisse satine, chrome, nickel satine.
Siège bois naturel, laqué cerisier, laqué noyer, wenge, blanc rouvre, paille plastifié.

Hocker aus Stahl, Durchm. Elliptisch 30x15 mm., cm. 46, cm. 60, cm. 76 (cm. 60 und cm. 76 mit Fusstuetze).
Epoxylackiert aluminium RAL 9006, epoxylackiert satiniert, verchromt, nickel satiniert.
Natural Holz Sitz, lackiert Kirschholz, Lackiert Nussbaumholz, wenge, weiss eich, Waschbar Kunststoffbeschichtet Stronsitze.

ART. 342

Sedia in tubo acciaio Ø 22 mm.
Verniciata alluminio RAL 9006, verniciata satinata, cromata, nickel satinata.
Sedile legno faggio naturale, tinto ciliegio, tinto noce, wenge, rovere sbiancato, paglia plastificata

Chair in steel tube Ø 22 mm.
Painted aluminium RAL 9006, painted satined, chromed, nickel satined.
Seat made in natural hetre, painted cherry, painted walnut, wenge, white oak, straw plastic seat.

Chaise tube en acier Ø 22 mm.
Vernisse aluminium RAL 9006, vernisse satine, chrome, nickel satine.
Siège bois naturel, laqué cerisier, laqué noyer, wenge, blanc rouvre, paille plastifié.

Stahlrohrstuhl, Durchm. Ø 22 mm.
Epoxylackiert aluminium RAL 9006, epoxylackiert satiniert, verchromt, nickel satiniert.
Natural Holz Sitz, lackiert Kirschholz, Lackiert Nussbaumholz, wenge, weiss eich, Waschbar Kunststoffbeschichtet Stronsitze.

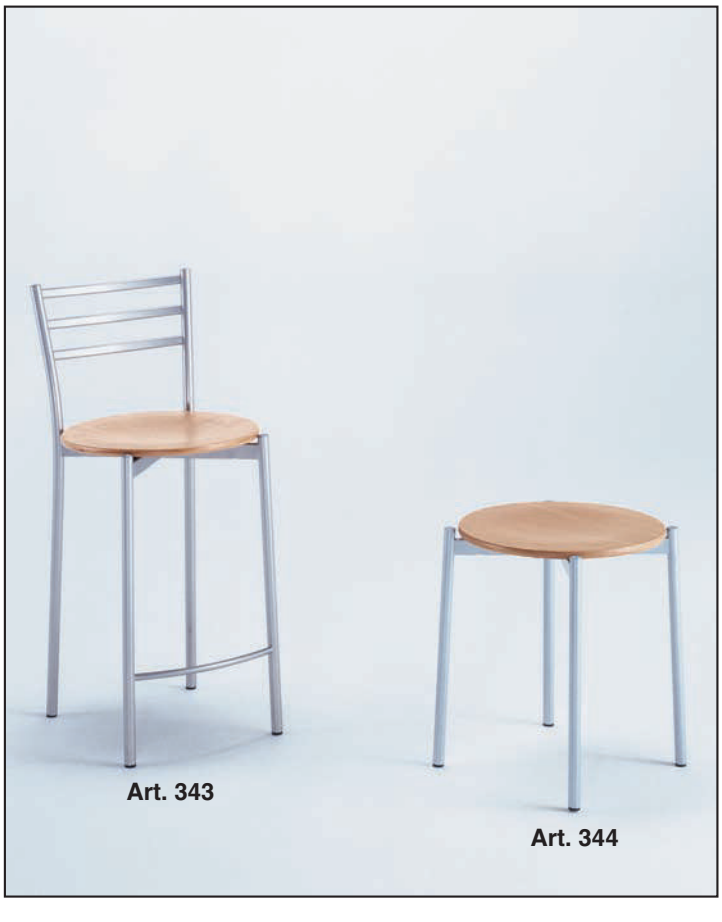

ART. 343 / 344

Sgabello in tubo acciaio Ø 22 mm., cm. 46, cm. 60,
(cm. 60 con poggiapiedi).
Verniciata alluminio RAL 9006, verniciata satinata, cromata, nickel satinata.
Sedile legno faggio naturale, tinto ciliegio, tinto noce, wenge, rovere sbiancato, paglia plastificata.

Stool in steel tube Ø 22 mm., cm. 46, cm. 60 (cm. 60 with foot rest).
Painted aluminium RAL 9006, painted satined, chromed, nickel satined.
Seat made in natural hetre, painted cherry, painted walnut, wenge, white oak, straw plastic seat.

Escabeau tube en acier Ø 22 mm., cm. 46, cm. 60 (cm. 60 avec repose pied).
Vernisse aluminium RAL 9006, vernisse satine, chrome, nickel satine.
Siège bois naturel, laqué cerisier, laqué noyer, wenge, blanc rouvre, paille plastifié.

Hocker aus Stahl, Durchm. Ø 22 mm., cm. 46, cm. 60
(cm. 60 mit Fusstuetze).
Epoxylackiert aluminium RAL 9006, epoxylackiert satiniert, verchromt, nickel satiniert.
Natural Holz Sitz, lackiert Kirschholz, Lackiert Nussbaumholz, wenge, weiss eich, Waschbar Kunststoffbeschichtet Stronsitze.

MANART srl - 23876 MONTICELLO (LC) - Via T. Moneta, 17 - Fraz. Cortenuova - Tel. 039.9203555 - 039.9202644 - Fax 039.9202801
e-mail: manart@manart.it - www.manart.it

ART. D

Sedia impilabile in tubo acciaio Ø20 mm, verniciato o cromato.
Sedile e schienale in laminato. Colori a richiesta.

Stackable chair in steel tube Ø20 mm, painted or chromed.
Laminated seat and back. Colors on request.

Chaise empilable en tube d'acier Ø20 mm, peint ou chromé.
Siège et dos stratifiés. Couleurs sur demande.

Stapelbarer Stuhl aus Stahlrohr Ø20 mm, lackiert oder verchromt.
Laminierter Sitz und Rücken. Farben auf Anfrage.

versione D* con schienale “arrotondato”.
D* version with "rounded" backrest.
Version D* avec dos "arrondi".
D* Version mit "abgerundetem" Rücken.

ART. D

Sedia impilabile in tubo acciaio Ø20 mm verniciato o cromato.
Sedile e schienale imbottiti in finta pelle. Colori a richiesta.

Stackable chair in steel tube Ø20 mm, painted or chromed.
Seat and back upholstered in imitation leather. Colors on request.

Chaise empilable en tube d'acier Ø20 mm, peint ou chromé.
Assise et dossier rembourrés en simil cuir. Couleurs sur demande.

Stapelbarer Stuhl aus Stahlrohr Ø20 mm, lackiert oder verchromt.
Sitz und Rückenlehne in Kunstleder gepolstert. Farben auf Anfrage.

ART. D Sgabello

Sgabello in tubo acciaio Ø22 mm verniciato o cromato, con poggiapiedi.
Sedile e schienale in laminato o finta pelle. Colori a richiesta.
H. 65-75 cm.

Stool in steel tube Ø22 mm, with footrest, painted or chrome.
Laminated or imitation leather seat and back. Colours on request.

Tabouret en tube d'acier Ø22 mm, avec repose-pieds, peint ou chromé.
Siège et dos stratifiés ou simil cuir. Couleurs sur demande.

Hocker in Stahlrohr Ø22 mm, mit Fußstütze, lackiert oder verchromt.
Laminiert oder Kunstleder Sitz und Rücken. Farben auf Anfrage.

ART. 346

Sedia in tubo acciaio Ø20 mm verniciato o cromato.
Sedile e schienale in laminato. Colori a richiesta.

Chair in steel tube Ø20 mm, painted or chromed.
Laminated seat and back. Colors on request.

Chaise en tube d'acier Ø20 mm, peint ou chromé.
Siège et dos stratifiés. Couleurs sur demande.

Stuhl aus Stahlrohr Ø20 mm, lackiert oder verchromt.
Laminierter Sitz und Rücken. Farben auf Anfrage.

MANART srl - 23876 MONTICELLO - FRAZ. CORTENUOVA (LC) ITALY - Via T. Moneta, 17 - Tel. 039.920.35.55 - 039.920.26.44 - Fax 039.920.28.01
www.manart.it e-mail: manart@manart.it

Art. 325

ART. 325

Sedia in tubo acciaio Ø 22 mm. verniciatura epossidica, satinata, cromata.
Sedile in paglia lavabile: naturale, nero, grigio e bianco;
in gomma club nera o grigia; sky bianco, nero o grigio;
legno naturale o laccato nero, bianco.

Chair steel tube Ø 22 mm. epoxydic, painted chromed, satined
Washable straw (plastic) seat available in natural, black, white;
Rubber club black or gray; natural wood or painted black or white;
sky white, black or gray.

Chase tube acier Ø 22 mm. peinture epoxyde ou chrome, satiné.
Siège paille lavable plastifié couleur naturel, noir, gris, blanc;
caoutchuc club noir ou gris; sky blanc, noir ou gris;
bois naturel ou lacqué noir ou blanc.

Stahlrohrstuhl Ø 22 mm. epoxylackierung oder verchromt, satiniert.
Waschbar kunststoffbeschichtet Strohsitze Farbe natural,
schwarz, grau und weiss; Skay weiss, schwarz oder grau;
Natural Holzsitze oder lackiert schwarz oder weiss.

Art. D

ART. D

Sedia sovrapponibile in tubo acciaio
verniciato o cromato cilindrico Ø 20 mm.
Sedile e schienale imbottiti in skay o formica.
Colori a richiesta.

Superimposable chair cylindrical steel tube
painted or chromed Ø 20 mm.
Seat and back padded skay or formica.
Colours at request.

Chase superposable tube acier cylindrique
peinture epoxyde ou chromé Ø 20 mm.
Siège et dossier rembourrée skay ou formica.
Couleurs à demande.

Übereinanderlegbar Stohl mit zylindrisch
Stahlrohr Ø 20 mm.
Epoxylackierung oder verchromt.
Sitz und Rueckenlehne polster
Skay oder Formica Farbe auf Wunsch.

ART. 39/A

Sedia in tubo acciaio Ø 25 mm.
Verniciatura epossidica, cromato, ottonato, satinato.
Sedile e schienale con impagliatura tipo Vienna.
Bordo nero o naturale.

Chair in steel tube Ø 25 mm.
Epoxydic painting, chromed, brassed, satined.
Seat and back with pending, type Vienna. Back or natural edge.

Chaise tube en acier Ø 25 mm.
Peinture époxyde, chromé, laitonné, satiné.
Siège et Dossier avec empaillage type Vienna. Bord Noir ou naturel.

Stahlrohrstuhl Ø 25 mm.
Epoxylackierung, verchromt, vermessingt, satiniert.
Sitz und Rueckenlehne mit Strohgeflecht, Typ Vienna; schwarz oder natural Bord.

ART. 39/B

Sedia in tubo acciaio Ø 25 mm. con braccioli.
Verniciatura epossidica, cromata, ottonata, satinata.
Sedile e schienale con impagliatura tipo Vienna.
Bordo nero o naturale.
Braccioli in legno.

Chair in steel tube Ø 25 mm. with arms.
Epoxydic painting, chromed, brassed, satined.
Seat and back with mending, type Vienna. Back or natural edge.
Wood arms.

Chaise tube en acier Ø 25 mm. avec accoudoirs.
Peinture époxyde, chromé, laitonné, satiné.
Siège et Dossier avec empaillage type Vienna. Bord noir ou naturel.
Accoudoirs en bois.

Stahlrohrstuhl Ø 25 mm. mit Armlehnen.
Epoxylackierung, verchromt, vermessingt, satiniert.
Sitz und Rueckenlehne mit Strohgeflecht, Typ Vienna; Schwarz oder
natural Bord.
Armlehnen aus Holz.

MANART srl - 23876 MONTICELLO (LC) - Via T. Moneta, 17 - Fraz. Cortenuova - Tel. 039.9203555 - 039.9202644 - Fax 039.9202801
e-mail: manart@manart.it - www.manart.it

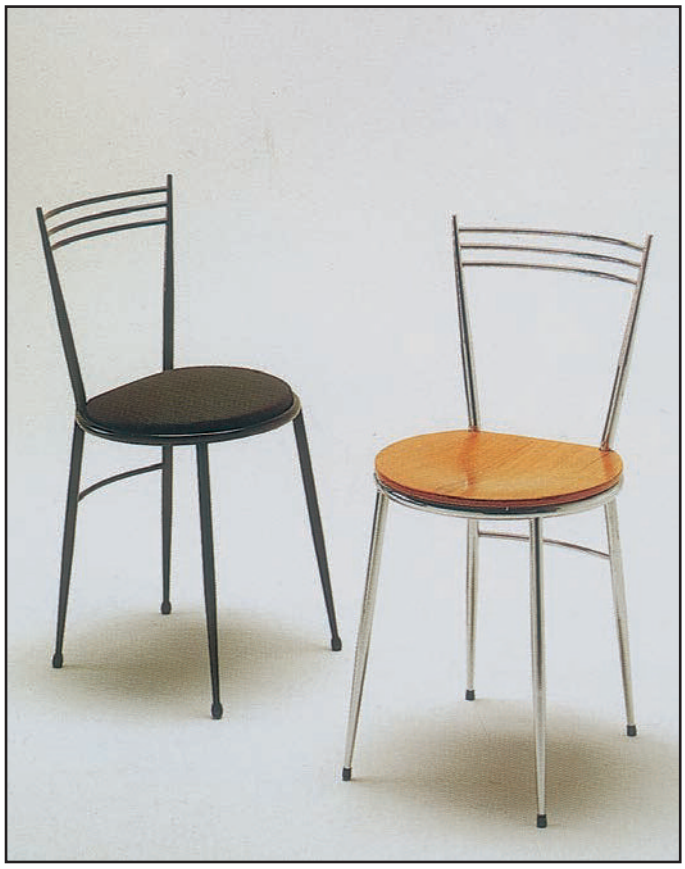

ART. 331

Sedia in tubo acciaio Ø 20 mm.
Verniciata epossidica in tutti i colori, cromata, ottonata, satinata.
Sedile legno naturale, gomma club nera o grigia,
paglia lavabile plastificata, naturale, grigio, nero, bianco.

Chair in steel tube Ø 20 mm.
Model with epoxidic lacquering, chromed plating or brass plated, satined.
Washable straw seat available in natural, black, grey or white colours.
Model with black, grey, india rubber club, or natural wood.

Chaise tube en acier Ø 20 mm.
Vernissage epoxidique tous couleurs, chromé, laitonné, satiné.
Siège en paile lavable en couleurs naturel, noir, gris, ou bois naturel.

Stahlrohrstuhl, Durchm. 20 mm.
Epoxylackiert, alle Farben, verchromt, vermessingt, satiniert.
Sitz, Modell aus holz oder Modell Club, aus schwarzem oder
grauem Gummi oder aus plastikbeschichtem, abwaschbarem Stroh.

ART. 329

Sedia in tubo acciaio Ø 32 mm.
Verniciata epossidica in tutti i colori, cromata, ottonata, satinata.
Sedile in plastica tipo Vienna, gomma club nera o grigia,
paglia lavabile plastificata, naturale, grigio, nero, bianco.

Chair in steel tube Ø 32 mm.
Model with epoxidic lacquering, chromed plating or brass plated, satined.
Washable straw seat available in natural, black, grey or white colours.
Model with black, grey, india rubber club, or plastic sea t Vienna.

Chaise tube en acier Ø 32 mm.
Vernissage epoxidique tous couleurs, chromé, laitonné, satiné.
Siège en paille lavable en couleurs naturel, noir, gris, blanc
ou en cautchouc club noir ou gris, ou en plastique.

Stahlrohrstuhl, Durchm. 32 mm.
Epoxylackiert, alle Farben, verchromt, vermessingt, satiniert.
Sitz, Modell Vienna, aus gepresstem Plastik, oder Modell Club, aus
schwarzem oder grauem Gummi oder aus plastikbeschichtem,
abwaschbarem Stroh.

ART. 330

Sedia in tubo acciaio Ø 25 mm.
Verniciata epossidica in tutti i colori, cromata, ottonata.
Sedile, gomma club nera o grigia,
o paglia lavabile plastificata, naturale, bianco, nero, grigio o sky.

Chair in steel tube Ø 25 mm.
Model with epoxidic lacquering, chromed plating or brass plated.
Washable straw seat available in natural, black, grey or white colours.
Model with black, grey, india rubber club, or in sky.

Chaise tube en acier Ø 25 mm.
Vernissage epoxidique tous couleurs, chromé ou laitonné
Siege en paile lavable en couleurs naturel, noir, gris, blanc
ou en cautchouc club noir ou gris, ou en sky.

Stahlrohrstuhl, Durchm. 25 mm.
Epoxylackiert, alle Farben, verchromt, vermessingt.
Sitz, Modell sky oder Modell Club, aus schwarzem oder
grauem Gummi oder aus plastikbeschichtem, abwaschbarem Stroh.

ART. 311

Sedia in tubo acciaio Ø 25 mm.
Verniciatura epossidica tutti i colori:
cromato, ottonato, satinato. Sedile in plastica.

Chair in steel tube Ø 25 mm.
Epoxydic painting every coulor:
chromed, brassed, satined. Plastic seat.

Chaise tube en acier Ø 25 mm.
Peinture époxyde tous les couleurs:
chromé, laitonné, satiné. Siège en plastique.

Stahlrohrstuhl Ø 25 mm.
Epoxylackierung alle Farben:
verchromt, vermessingt, satiniert. Sitz aus Plastik.

ART. 311/T

Sedia in tubo acciaio Ø 25 mm.
Verniciatura epossidica tutti i colori:
cromato, ottonato, satinato. Spalliera con tondini.

Chair in steel tube Ø 25 mm.
Epoxydic painting every coulor:
chromed, brassed, satined. Back with iron rods.

Chaise tube en acier Ø 25 mm.
Peinture époxyde tous les couleurs:
chromé, laitonné, satiné. Dossier avec fer baguettes.

Stahlrohrstuhl Ø 25 mm.
Epoxylackierung alle Farben:
verchromt, vermessingt, satiniert.
Rueckenlehne mit Stabeisen.

MANART srl - 23876 MONTICELLO (LC) - Via T. Moneta, 17 - Fraz. Cortenuova - Tel. 039.9203555 - 039.9202644 - Fax 039.9202801
e-mail: manart@manart.it - www.manart.it

ART. 323

Sedia in tubo Ø 22 mm. fusto verniciato o cromato.
Imbottitura in stoffa skai o finta pelle.
Disponibile con braccioli e tavoletta snodabile.

Chaise en tube Ø 22 mm. carcasse vernie ou chromée
Rembourrage en étoffe skai en simili, cuir.
Article disponible avec brass et tablette réglable aussi.

Chair with tube Ø 22 mm. lacquered or chrome-plated frame.
Stuffing with fabric skai imitation leather.
Models with arms and jointed bar are also available.

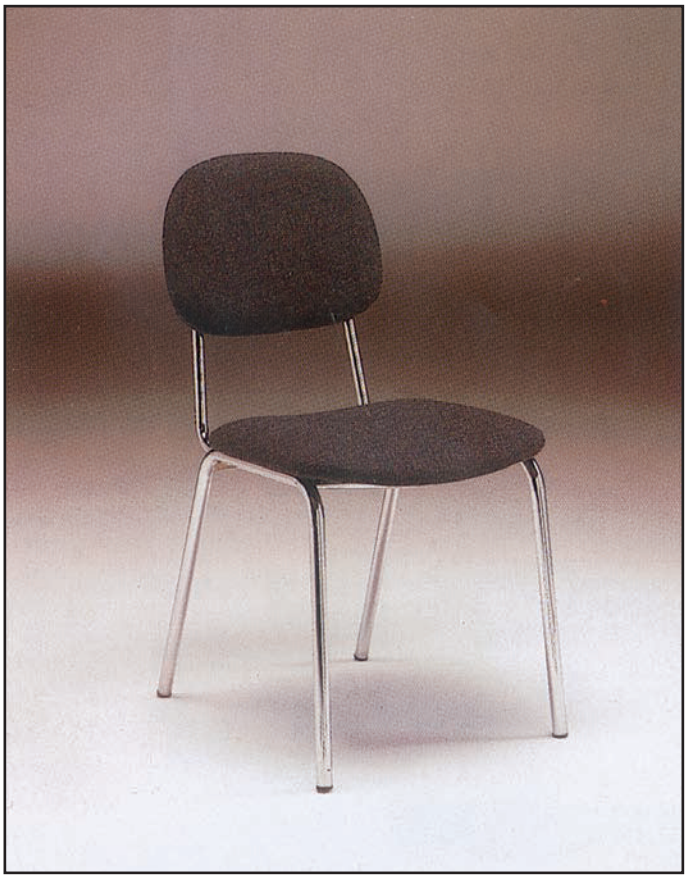

ART. 77 SEDIA

Poltroncina girevole con braccioli disponibile anche senza braccioli
o con regolazione a gas.
Imbottitura in stoffa o finta pelle.

Petit fauteuil tournant avec bras.
Article disponible sans bras ussi ou avec réglage à gaz.
Rembourrage en étoffe ou en simili cuir.

Little revolving armchair, stuffing with fabric or imitation leather.
Models without arms with gas.
Adjustment are also available.

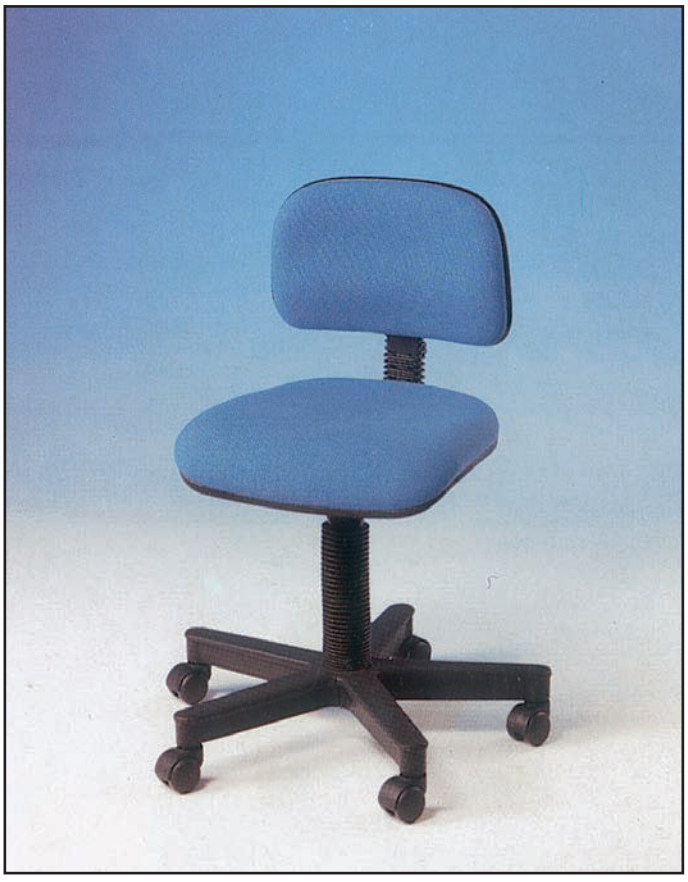

ART. 81 SEDIA

S.B. Sedia dattilo girevole regolabile in altezza.
Disponibile con braccioli e regolazione a gas.
Imbottitura in stoffa o finta pelle.

S.B. Chaise tournante, modéle dactylographe avec réglage de l'hauteur.
Article disponible avec bras et réglage à gaz aussi.
Rembourrage en étoffe ou en simili cuir.

S.B. Revolving chair, typist model, with governor for different heights.
Models with arms and gas-adjustment are also available.
Stuffing with fabric or imitation leather.

ART. 63 SEDIA

Poltroncina girevole regolabile in altezza disponibile con regolazione a gas.
Imbottitura in stoffa o finta pelle.

Fauteuil tournant avec réglage de l'avauteur..
Article disponible avec réglage à gaz aussi.
Rembourrage en étoffe ou en simili cuir.

Revolving armchair with governor for different heights,
also available with gas-adjustment.
Stuffing with fabric or imitation leather.

MANART srl - 23876 MONTICELLO (LC) - Via T. Moneta, 17 - Fraz. Cortenuova - Tel. 039.9203555 - 039.9202644 - Fax 039.9202801
e-mail: manart@manart.it - www.manart.it

ART. 327 B.T.

Sedia in tubo acciaio Ø 22 mm. con bracciolo e tavoletta snodabile ripiegabile in plastica nera.
Verniciata epossidica in tutti i colori, cromata.
Sedile in polipropilene con possibilità di ignifugo. In vari colori.

Chair steel tube Ø 22 mm. with arms and revolving, folding table made of black plastic.
Epoxy coated in all colours or chromium plated.
Seat available in polypropylene or fire retardent material in different colours.

Chaise en tube acier Ø 22 mm. avec bras et planchette pivotante et pliante en plastique noir
Verni époxi toutes les couleurs ou chromé
Siege en polypropylène ou bien en matériel ignifuge, différentes couleurs.

Stuhl aus Stahlrohr, Durchmesser 22 mm. mit Arm und drehbarem, zusammenklappbarem kleinem tisch ous schwarzem plastik.
In allen Farben epoxydlackiert oder verchromt.
Sitz entweder aus Polypropylen oder feuerfestem Material in verschiedenen Farben lieferbar.

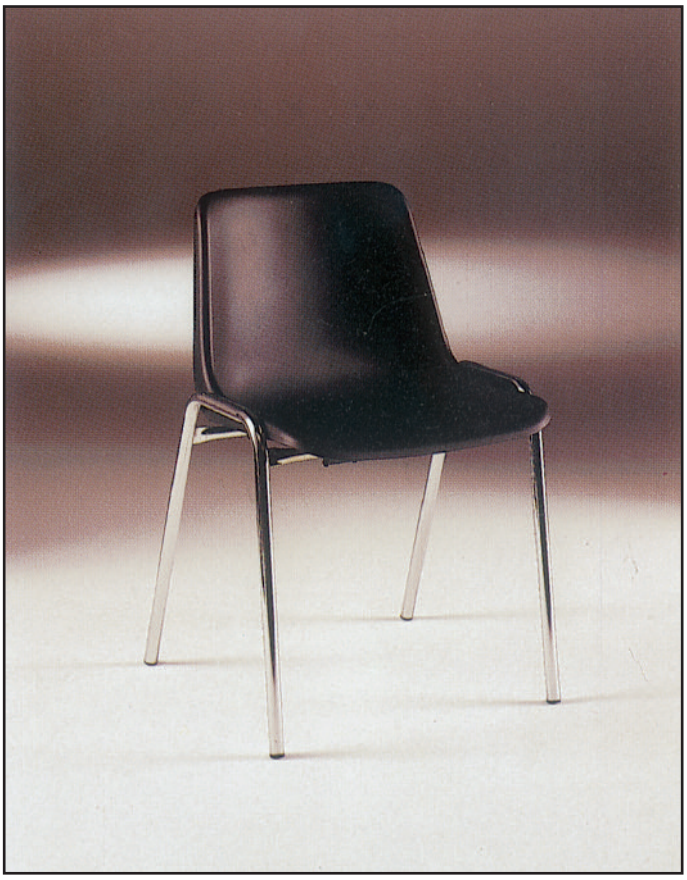

ART. 327

Sedia in tubo acciaio Ø 22 mm.
Verniciata epossidica in tutti i colori, cromata.
Sedile in polipropilene con possibilità di ignifugo. In vari colori.

Chair steel tube Ø 22 mm.
Epoxy coated in all colours or chromium plated.
Seat available in polypropylene or fire retardent material in different colours.

Chaise en tube acier Ø 22 mm.
Verni époxi toutes les couleurs ou chromé
Siege en polypropylène ou bien en matériel ignifuge, différentes couleurs.

Stuhl aus Stahlrohr, Durchmesser 22 mm.
In allen Farben epoxydlackiert oder verchromt.
Sitz entweder aus Polypropylen oder feuerfestem Material in verschiedenen Farben lieferbar.

ART. 333

Sedia in tubo ovale 30x15 mm.
Fusto cromato o verniciato epossidico in tutti i colori.
Seduta in stoffa o skai di vari colori.
Possibilità di inserire anche successivamente nel fusto dei braccioli o tavoletta snodabile ripiegabile in plastica nera.

Chair in oval steel tube 30x15 mm.
Chromium plated or epoxi coated in all colours.
Seat in fabric or imitation leather in different colours.
It is possible to insert arms or a revolving, folding table mad of black plastic in the frame.

Chaise en tube ovale 30x15 mm.
Fût en tissu ou cuir artificiel, différentes couleurs.
Possibilité de compléter le fût avec bras ou planchette pivotante et pilante en plastique noir.

Stuhl aus ovalem Stahlrohr 30x15 mm.
Gestell entweder verchromt oder in allen Farben epoxylackiert. Sitz aus bestht die Moeglichkeit auch nachtraeglich Arme oder einen dreh und zusammenklappbaren kleinen Tisch aus schwarzem plastik in das gestell einzusetzen.

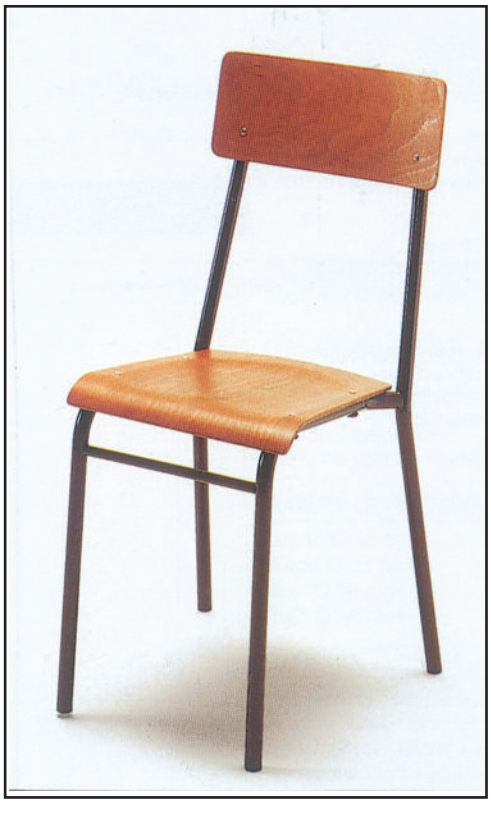

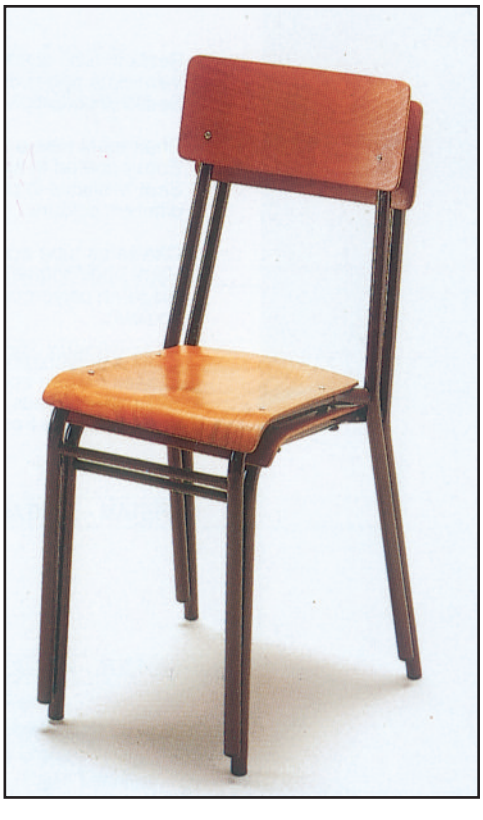

ART. 332

Sedia in tubo acciaio Ø 22 mm.
Verniciata epossidica in tutti i colori, cromata.
Sedile in faggio tinto noce o naturale.

Chair in steel tube Ø 22 mm.
Model with epoxidic lacquering, chromed plating.
Seat in wooden.

Chaise en tube en acier Ø 22 mm.
Vernissage epoxidique tous couleurs, chromé.
Seige en bois.

Stahlrohrsthl, Durchm. 22 mm.
Epoxylackiert, alle Farben, verchromt
Sitz, Modell aus holz.

MANART srl - 23876 MONTICELLO (LC) - Via T. Moneta, 17 - Fraz. Cortenuova - Tel. 039.9203555 - 039.9202644 - Fax 039.9202801
e-mail: manart@manart.it - www.manart.it

ART. G

Sgabello in tubo acciaio
cromato o verniciato Ø 20 mm.
sedile imbottito in skay o in formica.
H. 45 - 60 - 70 cm. (H. cm. 70 con poggiapiedi)

Steel stool
chromed or painted tube Ø 20 mm.
padded in skay or in formica seat.
H 45 - 60 - 70 cm. (with foot rest).

Escabeau en tube acier
chromé ou laqué epoxyde Ø 20 mm.
rembourré en skay où en laminé.
H. 45 - 60 - 70 cm. (avec repose - pied).

Hocker aus Stahl
verchromt oder lackiert Rohr Ø 20 mm.
polster in Skay oder in Formica.
H. 45 - 60 - 70 cm (mit Fussstuetze)

ART. 340

Sgabello in tubo acciaio
cromato o verniciato Ø 25 mm.
sedile imbottito in skay o in formica. H. cm. 80.

Steel stool
chromed or painted tube Ø 25 mm.
with padded skay or in formica seat. H 80 cm.

Escabeau en tube acier
chromé ou laqué Ø 25 mm.
rembourré en skay où en laminé. H. 80 cm.

Hocker aus Stahl
verchromt oder lackiert Rohr Ø 25 mm.
polster in Skay oder in Formica cm. 80

Art. 93

ART. 93

Scaletta in tubo acciaio cromato o verniciato
Ø 20 mm. con 3 gradini in legno
h. 65 cm.

Small staircase chromed or painted
tube Ø 20 mm. with 3 wooden steps
h. 65 cm.

Petite escalier en tube acier chromé ou laqué
Ø 20 mm. avec 3 degrés en bois
h. 65 cm.

Treppchen verchromt oder lackiert
Rohr Ø 20 mm. mit 3 Holzstufen
h. 65 cm.

MANART srl - 23876 MONTICELLO (LC) - Via T. Moneta, 17 - Fraz. Cortenuova - Tel. 039.9203555 - 039.9202644 - Fax 039.9202801
e-mail: manart@manart.it - www.manart.it

ART. 551

Portabito con porta ombrelli - tubo Ø 50 - alt. cm. 170 - Base marmo Ø 30 - Verniciato nero - Smontabile in 2 parti - Imballo in scatole da 1 pz.

Coat-Hook with umbrella-stand - Tube Ø 50 - Height 170 cm. - Marble base Ø 30 - Available finish: black - It can be disassembled in 2 parts - Packing in boxes of 1 pcs.

Portemanteau avec porte - para pluies - tube Ø 50 - Hauter cm. 170 - Base en marbre Ø 30 - Execution: noir - Demontable en 2 parties - Emballage en carton de 1 piéces.

Kleiderstaender mit Schirmstaender - Rohr Ø 50 - Höhe cm. 170 - Marmorbasis Ø 30 - Ausfuehrung: schwarz - Zerlegbar in 2 Teilen - Verpackung in Schachteln per 1.

ART. 552

Portabito - verniciato: nero - tubo Ø 50 - alt. cm. 170 - Base marmo Ø 30 smontabile in 2 parti -Imballo in scatole da 1 pz.

Rotating - Tube Ø 50 - Height 170 cm. Marble base Ø 30 - It can be disassembled in 2 parts - Packing in boxes of 1 pcs.

Portemanteau - tube Ø 50 - Hauter cm. 170
Base en marbre Ø 30 - Demontable en 2 parties - Emballage en carton de 1 piéces.

Drehbar Kleiderstaender - Rohr Ø 50 - Höhe cm. 170 - Marmorbasis Ø 30 - Zerlegbar in 2 Teilen - Verpackung in Schachteln per 1.

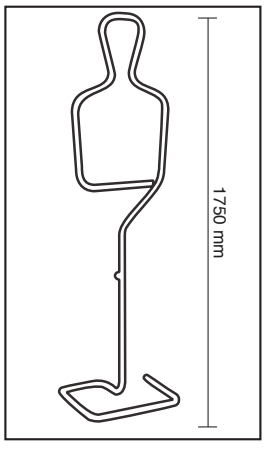

ART. 555

Manichino metallico uomo, verniciato o cromato
Ø 28 mm.
Metal man dummy, epoxydic painting, chromed
Ø 28 mm.
Mannequin métallique homme,
peinture époxyde, chromé, Ø 28.
Herren-Schaufensterpuppe in Metall,
Epoxylackierung, verchromt, Ø 28.

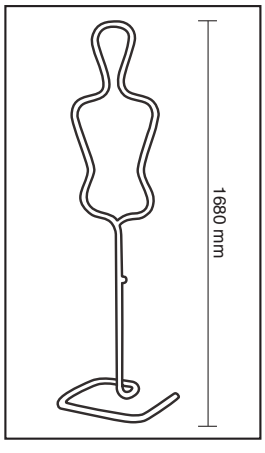

ART. 556

Manichino metallico donna, verniciato o cromato
Ø 28 mm.
Metal woman dummy, epoxydic painting, chromed
Ø 28 mm.
Mannequin métallique femme.
peinture époxyde, chromé, Ø 28.
Damen-Schaufensterpuppe aus Metall,
Epoxylackierung, verchromt, Ø 28.

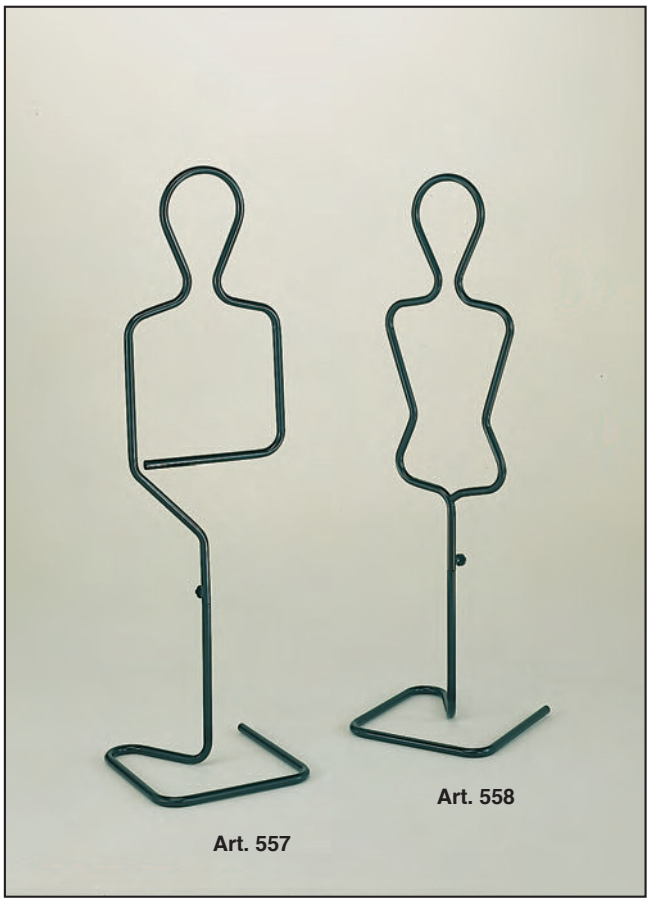

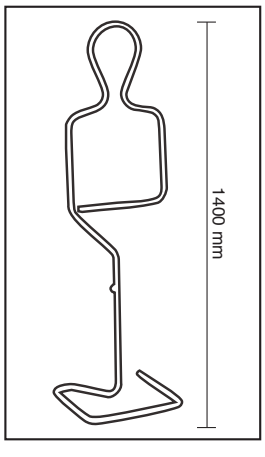

ART. 557 bambino / child enfant / Jungen

Manichino metallico bambino
verniciato o cromato, Ø 20 mm.
Metal child dummy, epoxydic painting, chromed
Ø 20 mm.
Mannequin métallique enfant.
peinture époxyde, chromé, Ø 20.
Jungen-Mädchen Schaufensterpuppe in Metall,
Epoxylackierung, verchromt, Ø 20.

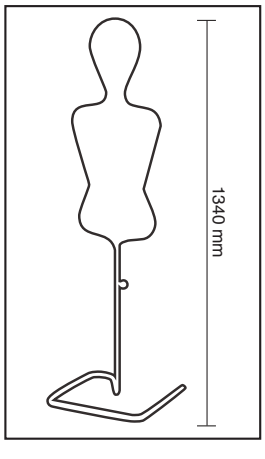

ART. 558 bambina / child enfant / Mädchen

Manichino metallico bambina,
verniciato o cromato, Ø 20 mm.
Metal child dummy, epoxydic painting, chromed
Ø 20 mm.
Mannequin métallique enfant.
peinture époxyde, chromé, Ø 20.
Jungen-Mädchen Schaufensterpuppe in Metall,
Epoxylackierung, verchromt, Ø 20.

MANART srl - 23876 MONTICELLO (LC) - Via T. Moneta, 17 - Fraz. Cortenuova - Tel. 039.9203555 - 039.9202644 - Fax 039.9202801
e-mail: manart@manart.it - www.manart.it